LEADING TECHNOLOGY
SOPHISTICATED TECHNOLOGY

INOXCN
FOCUS ON STAINLESS STEEL

Add: The Third Avenue,Binhai Developing Zone,
Longwan District Wenzhou China.325000
Mobile: 0086-15825603308
Tel: 0086-577-88906008
Fax: 0086-577-88906008
E-mail: sales@inoxcngroup.com/inoxcn@outlook.com
Skype: Kappolo3
Whatsapp /Wechat: 0086-15825603308

INOXCN GROUP CORPORATION

One stop solution provider for all stainless steel

PRODUCT SELECTION MANUAL



INOXCN
FOCUS ON STAINLESS STEEL

INOXCN

FOCUS ON STAINLESS STEEL

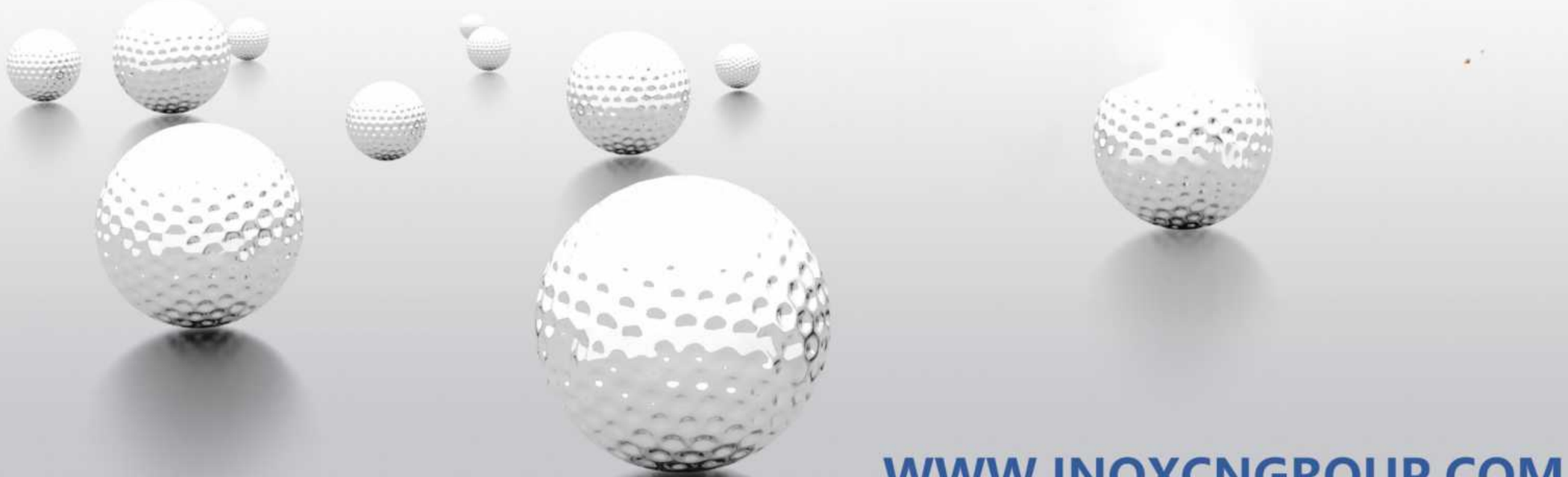

WWW.INOXCNGROUP.COM









CASTING WORKSHOP

Innovation only have starting,No end.....





INOXCN GROUP CORPORATION

One stop solution provider for all stainless steel

CONTENT

INOXCN

F/M MINI BALL VALVE 01
F/F MINI BALL VALVE 02
M/M MINI BALL VALVE 03
1PC BALL VALVE (QF101) 04
1PC HEXGON BAR STOCK 2000 PSI BALL VALVE (QF102) 05
1PC 2000 PSI CASTING BALL VALVE(QF103) 06
2PC REDUCE PORT BALL VALVE 800 PSI (QF201) 07
2PC REDUCE PORT BALL VALVE 1000 PSI (QF202) 08
2PC LIGHT-DUTY BALL VALVE (QF203) 09
2PC ECONOMICAL TYPE BALL VALVE (QF204) 10
2PC HEAVY TYPE BALL VALVE (QF205) 11
2PC DIN3202-M3 BALL VALVE (QF206) 12
2PC BALL VALVE 2000 PSI (QF207) 13
2PC BALL VALVE REDUCED 2000PSI (QF208) 14
2PC BALL VALVE M/F (QF209) 15
2PC BALL VALVE WITH IS05211 MOUNTING PAD(QF203M) 16
SWITCH TYPE SERIES ELECTRIC BALL VALVE 17
3PC BALL VALVE (QF301) 18
3PC BUTT WELD BALL VALVE (QF302) 19
3PC SOCKET WELD BALL VALVE (QF303) 20
3PC DIN3202-M3 LENGTH BALL VALVE(QF304) 21
3PC REDUCED 3000PSI BALL VALVE (QF306) 22
PNEUMATIC BALL VALVE 23
3PC BALL VALVE WITH IS05211 MOUNTING PAD(QF302M) 24
3WAY BALL VALVE WITH IS05211 MOUNTING PAD (QF401L/T) 25
1PC WAFER BALL VALVE (QF101F) 26
1PC WAFER FLANGED BALL VALVE WITH IS05211 MOUNTING PAD (QF101M) 27
2PC ANSI FLANGED BALL VALVE (QF201F) 28
2PC ANSI FLANGED BALL VALVE WITH DIRECT MOUNTING PAD (QF201M) 29
2PC DIN FLANGED BALL VALVE (QF203F) 30
2PC DIN FLANGED BALL VALVE WITH DIRECT MOUNTING PAD(QF203M) 31
3PC DIN FLANGED BALL VALVE (QF301F) 32
3PC DIN FLANGED BALL VALVE WITH ISO 5211 MOUNTING PAD (QF301M) 33
2PC BALL VALVE M/M (QF213) 34
3PC SANITARY BUTT WELD BALL VALVE (QF305) 35
3PC SANITARY LONG-BUTT WELD BALL VALVE WITH DIRECTING MOUNTING PAD (QF305M) 36
3PC SANITARY LONG-BUTT WELD BALL VALVE (QF306) 37
2PC JIS FLANGED BALL VALVE (QF202FM) 38
2PC JIS FLANGED BALL VALVE WITH DIRECT IS05211 MOUNTING PAD (QF202FDM) 39
Y-STRAINER (QF502) 40
Y-SPRING CHECK VALVE (QF503) 41
Y—STRAINER (QF504) 42
STAINLESS STEEL PNEUMATIC ANGLE SEAT VALVE 43
TWO POSITION TWO WAY ANGLE SEAT CONTROL VALVE 44
TWO POSITION TWO WAY ANGLE SEAT CONTROL VALVE 45
LNTERNAL THREAD GLOBE VALVE 46
GLOBE VALVE (QF801) 47
GATE VALVE (QF901) 48
SWING CHECK VALVE (QF601) 49
2PC SPRING CHECK VALVE (QF506) 50
3PC SPRING CHECK VALVE(QF507) 51
WAFER CHECK VALVE (QF505) 52
BIBCOCK BALL VALVE (QF201W) 53
POLISHED STAINLESS STEEL BENT BALL COCK WITH BOTTLEFILLER (QF202W) 54

CONTENT

INOXCN

BARREL NIPPLE (BN) 55
WELDING NIPPLE (WN) 56
BW HOSE NIPPLE (BWHON) 57
MALE HOSE NIPPLE (MHON) 58
DOUBLE HOSE NIPPLE (DHON) 59
PARREL NIPPLE (PN) 60
ELBOW 90° (LB 90°) 61
ELBOW 45° (LB 45°) 62
TEE(BT) 63
RED ELBOW 90° (RLB) 64
RED TEE (RTB) 65
HEX.NIPPLE (HN) 66
HEX.BUSHING (HB) 67
HEX.HOSE NIPPLE (HON) 68
HEX.PLUG(HP) 69
RED.HEX.NIPPLE (RHN) 70
ROUND CAP (CB) 71
RED.SOCKET M/F (RS M/F) 72
UNION CONICAL F/F (CU-Z-F/F) 73
UNION CONICAL BW/BW (CU-BW-Z) 74
UNION CONICAL M/F (CU-Z-M/F) 75
UNION CONICAL M/M (CU-Z-M/M) 76
COUPLING (SPU) 77
RED.SOCKET BANDED (RSB) 78
FEMALE HEX.HOSE NIPPLE (FHON) 79
Y TYPE TEE (Y-TB) 80
TYPE A 81
TYPE DC 82
FLANGE GATE VALVE 83
FLANGED GATE VALVE 84
FLANGE GATE VALVE 85
FLANGED GLODE VALVE 86
FLANGE GLOBE VALVE 87
FLANGE GLOBE VALVE 88
SWING FLANGE CHECK VALVE 89
SWING FLANGED CHECK VALVE 90
SWING FLANGE CHECK VALVE 91
"A" TYPE WAFER BUTTERFLY VALVE 92
API FORGED STEEL GATE VALVE 93
API FORGED STEEL GATE VALVE 94
API FORGED STEEL FLANGE END GATE VALVE 95
VAPI FORGED STEEL FLANGE END GATE VALVE 96
API FORGED STEEL GLOBE VALVE 97
API FORGED STEEL GLOBE VALVE 98
API FORGED STEEL FLANGE GLOBE VALVE 99
API FORGED STEEL FLANGE GLOBE VALVE 100
API FORGED STEEL LIFT CHECK VALVE 101
API FORGED STEEL LIFT CHECK VALVE 102
API FORGED STEEL FLANGE END CHECK VALVE 103
SOCKET HIGH PRESSURE PIPE FITTINGS SERIES 104
SOCKET HIGH PRESSURE PIPE FITTINGS SERIES 105
SOCKET HIGH PRESSURE PIPE FITTINGS SERIES 106
SOCKET HIGH PRESSURE PIPE FITTINGS SERIES 107

BALL VALVE

F/M MINI BALL VALVE

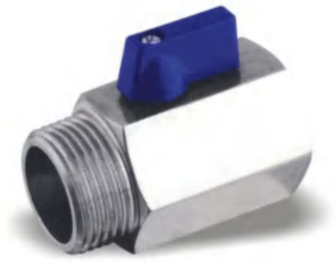

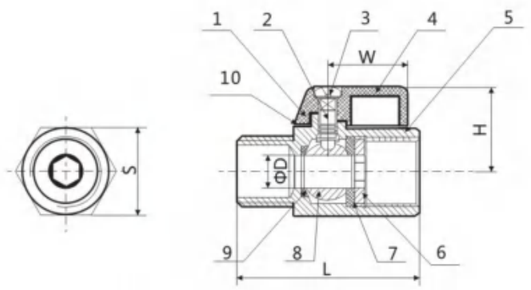

FEATURES

- ■1000PSI/PN63
- ■Reduce Port
- ■Investment Casting
- ■Blow-out proof Stem
- ■External polished
- ■Max temperature: -25℃ to 180℃
- ■PTFE seats & seals
- ■Thread: ASME B 1.20.1 BS21 .DIN2999/259, ISO228-1, JIS B 0203, ISO7/1
- ■Inspection Testing: API598, EN12266

MATERIALS LIST

ITEM	DESIGNATION	QTY	MATERIAL
1	O-RING	2	VITON
2	STEM	1	304/316
3	BOLT	1	304
4	LEVER	1	ALUMINUM ALLOY
5	BODY	1	CF8/CF8M
6	CAP	1	CF8/CF8M
7	BALL SEAT(A)	1	PTFE
8	BALL	1	304/316
9	BALL SEAT(B)	1	PTFE
10	THRUST WASHER	1	PTFE

DIMENSIONS(mm)

SIZE / ITEM	1/4"	3/8"	1 /2"	3/4"	1"
D	8	8	9.2	12.5	15
L	39	41	46	55	65
H	26.5	26.5	28.3	31.5	34
W	22.8	22.8	22.8	22.8	22.8
S	21	21	24.5	31	38

Note: If the thread is taper type(NPT/BSPT),the nominal diameter is 7MM.

INOXCN
FOCUS ON STAINLESS STEEL

BALL VALVE

F/F MINI BALL VALVE

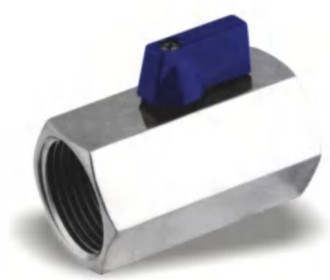

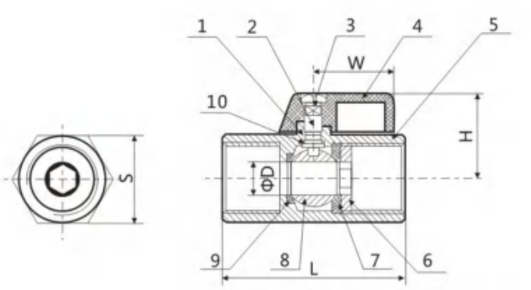

FEATURES

- ■1000PSI/PN63
- ■Reduce Port
- ■Investment Casting
- ■Blow-out proof Stem
- ■External polished
- ■Max temperature: -25℃to 180℃
- ■PTFE seats & seals
- ■Thread: ASME B1.20.1 BS21 .DIN2999/259,ISO228-1, JIS B 0203, ISO7/1
- ■Inspection Testing: API598, EN12266

MATERIALS LIST

ITEM	DESIGNATION	QTY	MATERIAL
1	O-RING	2	VITON
2	STEM	1	304/316
3	BOLT	1	304
4	LEVER	1	ALUMINUM ALLOY
5	BODY	1	CF8/CF8M
6	CAP	1	CF8/CF8M
7	BALL SEAT(A)	1	PTFE
8	BALL	1	304/316
9	BALL SEAT(B)	1	PTFE
10	THRUST WASHER	1	PTFE

DIMENSIONS(mm)

SIZE / ITEM	1/4"	3/8"	1 /2"	3/4"	1"
D	8	8	9.2	12.5	15
L	39	41	46	55	65
H	26.5	26.5	28.3	31.5	34
W	22.8	22.8	22.8	22.8	22.8
S	21	21	24.5	31	38

Note: If the thread is taper type(NPT/BSPT),the nominal diameter is 7MM.

BALL VALVE

M/M MINI BALL VALVE



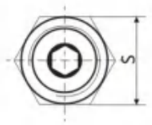

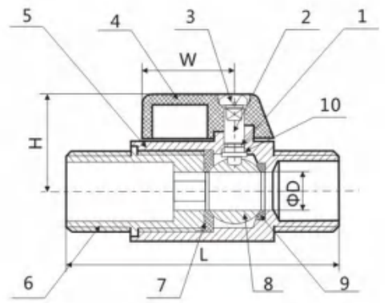

FEATURES

- ▪1000PSI/PN63
- ▪Reduce Port
- ▪Investment Casting
- ▪Blow-out proof Stem
- ▪External polished
- ▪Max temperature: -25℃ to 180℃
- ▪PTFE seats & seals
- ▪Thread: ASME B 1.20.1 BS21 .DIN2999/259, ISO228-1JIS B 0203, ISO7/1
- ▪Inspection Testing: API598, EN12266

MATERIALS LIST

ITEM	DESIGNATION	QTY	MATERIAL
1	O-RING	2	VITON
2	STEM	1	304/316
3	BOLT	1	304
4	LEVER	1	ALUMINUM ALLOY
5	BODY	1	CF8/CF8M
6	CAP	1	CF8/CF8M
7	BALL SEAT(A)	1	PTFE
8	BALL	1	304/316
9	BALL SEAT(B)	1	PTFE
10	THRUST WASHER	1	PTFE

DIMENSIONS(mm)

SIZE / ITEM	1/4"	3/8"	1 /2"	3/4"	1"
D	8	8	9.2	12.5	15
L	50	50	58	70	83
H	26.5	26.5	28.3	31.5	34
W	22.8	22.8	22.8	22.8	22.8
S	21	21	25	31	38

Note: If the thread is taper type(NPT/BSPT),the nominal diameter is 7MM.

INOXCN
FOCUS ON STAINLESS STEEL

BALL VALVE

1PC BALL VALVE (QF101)



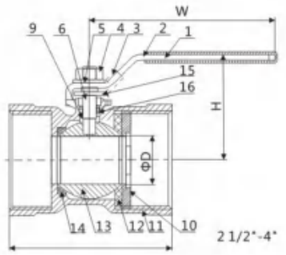

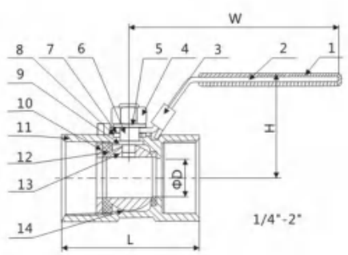

FEATURES

- ▪1000PSI/PN63
- ▪Reduce Port
- ▪Investment Casting
- ▪Blow-out proof Stem
- ▪Casting Approved AD2000-W0
- ▪PED97/23/EC(CE0035)Approved
- ▪W.P: 1/4"-2" 1000psi 2 1/2"~4〃 800psi
- ▪Thread: ASME B1.20.1 BS21 .DIN2999/259,ISO228-1, JIS B 0203, ISO7/1
- ▪Inspection Testing: API598, EN12266

MATERIALS LIST

ITEM	DESIGNATION	MATERIAL
1	HANDLE SLEEVE	PVC
2	HANDLE	304
3	LOCKING	304
4	STEM NUT	304
5	SPRING WASHER	304
6	STEM	304/316
7	PACKING RING	304
8	STEM PACKING	PTFE
9	THRUST WASHER	PTFE
10	CAP	CF8/CF8M
11	BODY	CF8/CF8M
12	BALL SEAT	RPTFE
13	BALL	304/316
14	BALL SEAT	PTFE
15	GLAND NUT	304
16	STEM PACKING	PTFE

DIMENSIONS(mm)

SIZE	ΦD	L	H	W	S	
1/4"	5	39	31	65	17	HEX
3/8"	6.8	44	36	85	21	
1/2"	9.2	56.5	41	95	25	
3/4"	12.5	59	44	95	32	
1"	15	71	48	111	38	
1-1/4"	20	78	54	111	49	
1-1/2"	25	83	65	135	53	
2"	32	100	72	135	65	
2-1/2"	38	120	80	154	83	OCT
3"	50	140	100	191	98	
4"	64	170	129	246	127	

BALL VALVE

1PC HEXGON BAR STOCK 2000 PSI BALL VALVE (QF102)

FEATURES

- ▪WIntemal Entry Blow-out Proof Stem
- ▪Pressure Rating: 2000 PSI (PN125)
- ▪Thread Ends: ANSI B2.1, BS 21, DIN2999/259
- ▪Material: Carbon Steel
- ▪Pressure Test: API 598



MATERIALS LIST

ITEM	DESIGNATION	QTY	MATERIAL
1	PLASTIC COVER	1	PLASTIC
2	HANDLE	1	304
3	STEM NUT	2	304
4	STEM	1	304
5	PACK RING	1	304
6	STEM PACKING	1	PTFE
7	THRUST WASHER	1	PTFE
8	BODY	1	CARBON STEEL
9	BODY GASKET	1	PTFE
10	CAP	1	WCB
11	BALL SEAT	2	PTFE/RPTFE
12	BALL	1	304

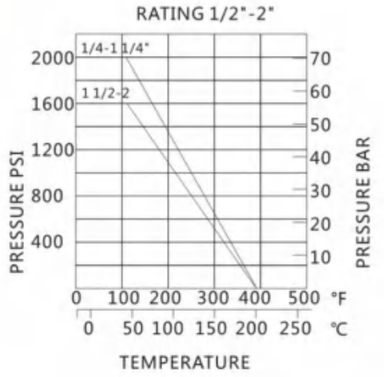

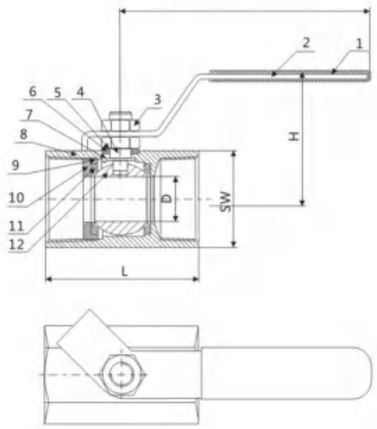

DIMENSIONS(mm)

SIZE	ΦD	L	H	W	SW	
1/4"	5	43	35	73	20	HEX
3/8"	7	45	38	73	25	
1/2"	9.5	62	50	115	30	
3/4"	12.5	70	58	115	36	
1"	15	85.5	62	129	41(46)	
1-1/4"	20	94	64	129	53	
1-1/2"	25	101.5	72	150	60	
2"	32	114	80	150	70(75)	

BALL VALVE

1PC 2000 PSI CASTING BALL VALVE(QF103)

FEATURES

- ▪2000PSKPN150)
- ▪Reduce Port
- ▪Investment Casting
- ▪Blow-out proof Stem
- ▪Tapped & drilled mounting pad (option)
- ▪PED97/23/PE (CE0035) Approved
- ▪Casting Approved AD2000-W0
- ▪Thread: ASME B1.20.1 BS21 .DIN2999/259, ISO228-1JIS B 0203, ISO7/1
- ▪Inspection Testing: API598, EN12266



MATERIALS LIST

ITEM	DESIGNATION	MATERIAL
1	HANDLE SLEEVE	PVC
2	HANDLE	304
3	LOCKING	304
4	STEM NUT	304
5	SPRING WASHER	304
6	STEM	304/316
7	PACK RING	304
8	STEM PACKING	PTFE
9	THRUST WASHER	PTFE
10	BODY	CF8/CF8M
11	SEAT(A)	RPTFE
12	BALL	CF8/CF8M
13	SEAT(B)	RPTFE
14	INSERT	304/316

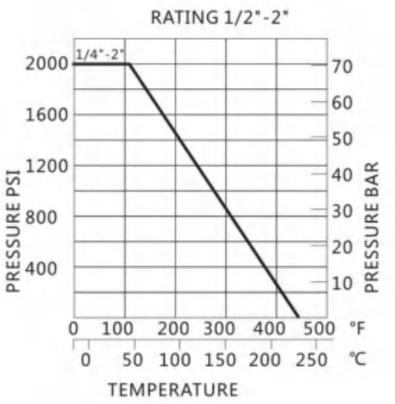

DIMENSIONS(mm)

SIZE	ΦD	L	H	W	S
1/4	9.2	59	44	91	22
3/8	9.2	59	44	91	22
1/2	9.2	67	44	91	26
3/4	12.5	71	47.5	111	32
1	15	84	60	111	40
11/4	20	94	65	126	50
11/2	25	100	71	126	55
2	32	H4	76.5	154	70

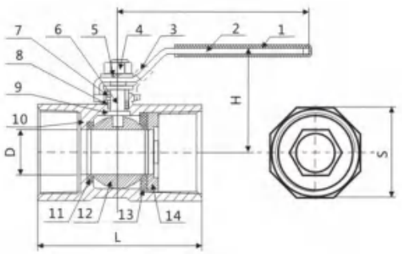

BALL VALVE

2PC REDUCE PORT BALL VALVE 800 PSI (QF201)

FEATURES

- ▪800PSKPN40)
- ▪Reduce Port
- ▪Investment Casting
- ▪Blow-out proof Stem
- ▪PED97/23/PE (CE0035) Approved
- ▪Casting Approved AD2000-W0
- ▪Thread: ASME B 1.20.1 BS21 .DIN2999/259, ISO228-1, JIS B 0203, ISO7/1
- ▪Inspection Testing: API598, EN12266



MATERIALS LIST

ITEM	DESIGNATION	QTY	MATERIAL
1	BODY	1	CF8/CF8M
2	CAP	1	CF8/CF8M
3	BALL	1	CF8/CF8M
4	BALL SEAT	2	RPTFE
5	JOINT GASKET	1	PTFE
6	THRUST WASHER	1	PTFE
7	0-RING	2	NBR
8	STEM PACKING	1	PTFE
9	STEM	1	304/316
10	NUT	1	304
11	HANDLE	2	304
12	HANDLE SLEEVE	1	PVC

RATING 15A-50A

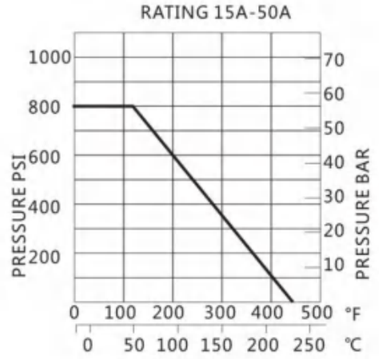

DIMENSIONS(mm)

ITEM	15A	20A	25A	32A	40A	50A
L	48.5	58.5	69	79	89	100.5
DN	10	15	20	25	31	39
S	25	30	38	47	53	65
Z	21	23.5	31	33	41	47

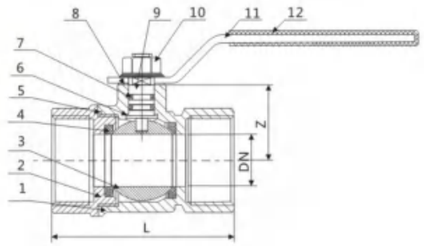

BALL VALVE

2PC REDUCE PORT BALL VALVE 1000 PSI (QF202)

FEATURES

- ▪1000PSI/PN63
- ▪Reduce Port
- ▪Investment Casting
- ▪Blow-out proof Stem
- ▪PED97/23/PE (CE0035) Approved
- ▪Casting Approved AD2000-W0
- ▪Thread: ASME B 1.20.1 BS21 .DIN2999/259, ISO228-1, JIS B 0203, ISO7/1
- ▪Inspection Testing: API598, EN12266



MATERIALS LIST

ITEM	DESIGNATION	QTY	MATERIAL
1	BODY	1	CF8/CF8M
2	CAP	1	CF8/CF8M
3	BALL	1	CF8/CF8M
4	BALL SEAT	2	RPTFE
5	JOINT GASKET	1	PTFE
6	THRUST WASHER	1	PTFE
7	STEM	1	304/316
8	STEM PACKING	1	PTFE
9	GLAND NUT	1	304
10	SPRING WASHER	1	304
11	STEM NUT	1	304
12	HANDLE	1	304
13	HANDLE SLEEVE	1	PVC

RATING 1/2"-2"

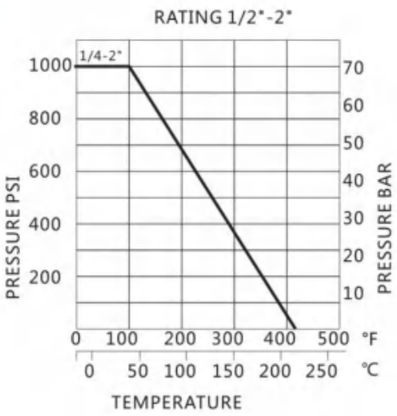

DIMENSIONS(mm)

SIZE	D	L	W	S
3/8"	9.2	38.5	76	21
1/2"	10	48.5	91	25
3/4"	15	58.5	91	30
1"	20	69	111	38
11/4"	25	79	111	47
11/2"	32	90	154	53
2"	38	100	154	66

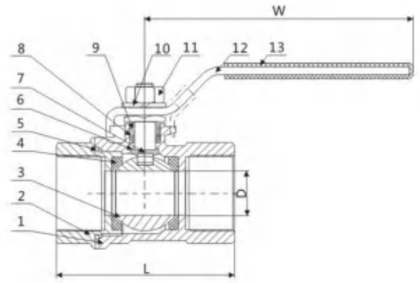

BALL VALVE

2PC LIGHT-DUTY BALL VALVE (QF203)

FEATURES

- ▪1000PSI/PN63
- ▪Full Port
- ▪Blow-out-proof stem design
- ▪PED97/23/PE (CE0035) Approved
- ▪Casting Approved AD2000-W0
- ▪Thread: ASME B 1.20.1 BS21 .DIN2999/259, ISO228-1, JIS B 0203, ISO7/1
- ▪Inspection Testing: API598, EN12266



MATERIALS LIST

ITEM	DESIGNATION	QTY	MATERIAL
1	HANDLE SLEEVE	1	PVC
2	HANDLE	1	304
3	GLAND NUT	1	304
4	STEM NUT	1	304
5	SPRING WASHER	1	304
6	STEM PACKING	1	PTFE
7	THRUST WASHER	1	PTFE
8	JOINT GASKET	1	PTFE
9	CAP	1	CF8/CF8M
10	BODY	1	CF8/CF8M
11	BALL SEAT	2	RPTFE
12	BALL	1	CF8/CF8M
13	STEM	1	304/316

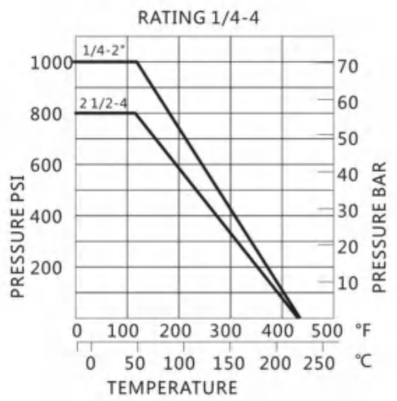

DIMENSIONS(mm)

SIZE	D	L	H	W	S
1/4"	9.2	36	41	76	18
3/8"	12.5	42	46	76	21
1/2"	15	48	50	85	25
3/4"	20	58	57	95	31
1"	25	68.5	68	120	37.5
1-1/4"	32	80	74	120	46.5
1-1/2"	38	90.5	85	150	53
2"	50	109	94	150	66
2 1/2"	65	139	120	215	82.5
3"	80	157	130	215	97.5
4"	100	200	160	300	127

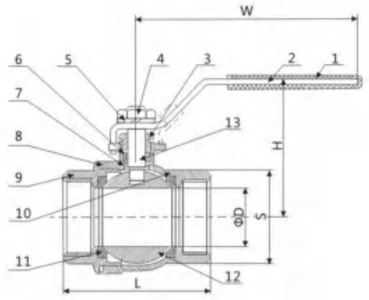

BALL VALVE

2PC ECONOMICAL TYPE BALL VALVE (QF204)

FEATURES

- ▪1000PSI/PN63
- ▪Full Port
- ▪Blow-out-proof stem design
- ▪PED97/23/PE (CE0035) Approved
- ▪Casting Approved AD2000-W0
- ▪Thread: ASME B1.20.1 BS21.DIN2999/259, ISO228-1, JIS B 0203, ISO7/1
- ▪Inspection Testing: API598, EN12266



MATERIALS LIST

ITEM	DESIGNATION	QTY	MATERIAL
1	HANDLE SLEEVE	1	PVC
2	HANDLE	1	304
3	GLAND NUT	1	304
4	STEM NUT	1	304
5	SPRING WASHER	1	304
6	STEM PACKING	1	PTFE
7	THRUST WASHER	1	PTFE
8	JOINT GASKET	1	PTFE
9	CAP	1	CF8/CF8M
10	BODY	1	CF8/CF8M
11	BALL SEAT	2	RPTFE
12	BALL	1	CF8/CF8M
13	STEM	1	304/316

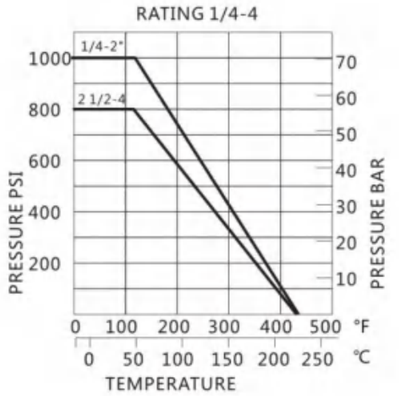

DIMENSIONS(mm)

SIZE	D	L	H	W	S
1/4"	11.6	48.5	48	91	19
3/8"	12.5	48.5	48	91	21
1/2"	15	58	52	91	25.5
3/4"	20	65	61	111	31
1"	25	77	65	111	37.5
1-1/4"	32	90	79	154	46.5
1-1/2"	38	98	83	154	53.5
2"	50	121	97	192	66
2 1/2"	64	145	129	246	82.5
3"	76	166	138	246	97.5
4"	94	240	175	317	130

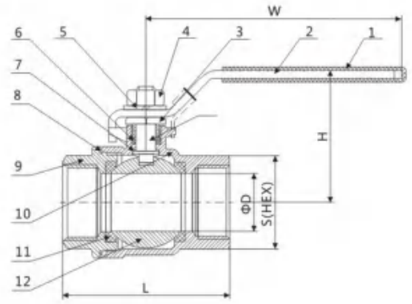

BALL VALVE

2PC HEAVY TYPE BALL VALVE (QF205)

FEATURES

- ▪1000PSI/PN63
- ▪Full Port
- ▪Blow-out-proof stem design
- ▪Body and end caps quality investment casting
- ▪PED97/23/PE (CE0035) Approved
- ▪Casting Approved AD2000-W0
- ▪Thread: ASME B 1.20.1 BS21 .DIN2999/259, ISO228-1JIS B0203, ISO7/1
- ▪Inspection Testing: API598, EN12266



MATERIALS LIST

ITEM	DESIGNATION	QTY	MATERIAL
1	HANDLE SLEEVE	1	PVC
2	HANDLE	1	304
3	GLAND NUT	1	304
4	STEM NUT	1	304
5	STEM	1	304/316
6	SPRING WASHER	1	304
7	STEM PACKING	1	PTFE
8	THRUST WASHER	1	PTFE
9	JOINT GASKET	1	PTFE
10	CAP	1	CF8/CF8M
11	BODY	1	CF8/CF8M
12	BALL SEAT	2	RPTFE
13	BALL	1	CF8/CF8M

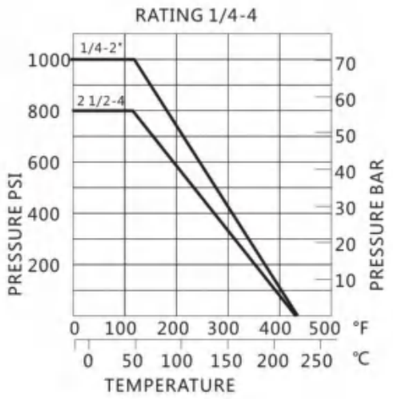

DIMENSIONS(mm)

SIZE	D	L	H	W	K	T
1/4"	11.6	50	48	91	28.5	12.5
3/8"	12.5	50	48	91	28.5	12.5
1/2"	15	58	52	103	28.5	13
3/4"	20	65	61	111	34.8	21
1"	25	80	65	126	34.8	22.5
1-1/4"	32	92	79	154	38.1	23.5
1-1/2"	38	105	83	154	38.1	23.5
2"	50	125	97	191	38.1	23.5
2 1/2"	64	155.6	129	244	56	32
3"	76	183	138	244	56	35
4"	94	240	175	315	63	50

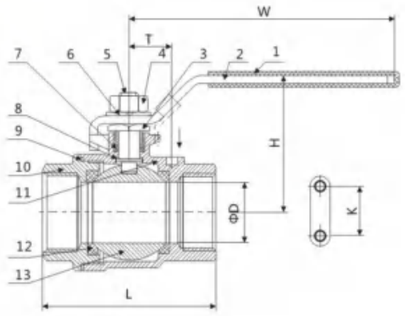

INOXCN
FOCUS ON STAINLESS STEEL

BALL VALVE

2PC DIN3202-M3 BALL VALVE (QF206)

FEATURES

- ▪1000PSI/PN63
- ▪Full Port
- ▪Investment Casting
- ▪Blow-out proof Stem
- ▪PED97/23/PE (CE0035) Approved
- ▪Casting Approved AD2000-W0
- ▪Length confirm to DIN3202/4-M3
- ▪Thread: ASME B1.20.1 BS21 .DIN2999/259, ISO228-1JIS B0203, ISO7/1
- ▪Inspection Testing: API598, EN12266



MATERIALS LIST

ITEM	DESIGNATION	MATERIAL
1	HANDLE SLEEVE	PVC
2	HANDLE	304
3	GLAND NUT	304/316
4	STEM NUT	304
5	SPRING WASHER	304
6	STEM PACKING	PTFE
7	THRUST WASHER	PTFE
8	JOING GASKET	PTFE
9	CAP	CF8/CF8M
10	BODY	CF8/CF8M
11	BALL SEAT	RPTFE
12	BALL	CF8/CF8M
13	STEM	304/316

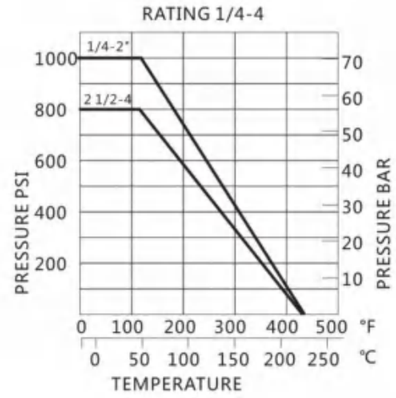

DIMENSIONS(mm)

SIZE	D	L	H	W	S
1/4"	11.5	55	48	103	22
3/8"	12.5	60	48	103	22
1/2"	15	75	52	103	26
3/4"	20	80	61	123	32
1"	25	90	65	123	39
1-1/4"	32	110	79	153	48.5
1-1/2"	38	120	83	153	55
2"	50	140	97	185	68
2 1/2"	64	185	135	243	84
3"	76	205	144	243	99
4"	94	240	166	295	128

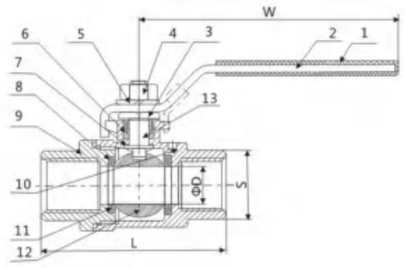

BALL VALVE

2PC BALL VALVE 2000 PSI (QF207)

FEATURES

- Full port
- W.P.: 1/472000WOG(PN150)
- Investment casting Blow-out proof stem
- Anti-static device & locking device(option)
- ASME B16.34 Wall thickness NACE Mr0175
- Thread type: ASME B 1.20.1 BS21 .DIN2999/259, ISO228-1JIS B 0203, ISO7/1
- Inspection Testing: API598, EN12266



MATERIALS LIST

ITEM	DESIGNATION	MATERIAL
1	HANDLE SLEEVE	PVC
2	HANDLE	304
3	GLAND NUT	304/316
4	STEM NUT	304
5	SPRING WASHER	304
6	STEM PACKING	PTFE
7	THRUST WASHER	PTFE
8	JOING GASKET	PTFE
9	CAP	CF8/CF8M
10	BODY	CF8/CF8M
11	BALL SEAT	RPTFE
12	BALL	CF8/CF8M
13	STEM	304/316

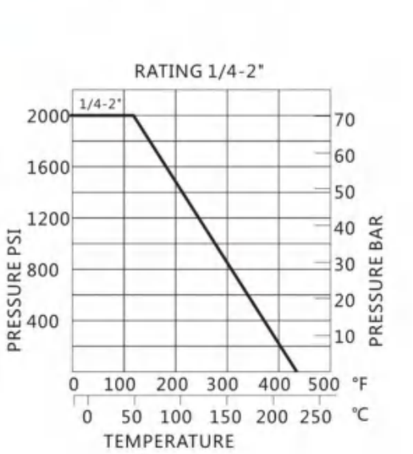

DIMENSIONS(mm)

SIZE	D	L	H	W	K	S
1/4"	9.2	54.3	48	91	28.5	25
3/8"	9.2	54.3	48	91	28.5	25
1/2"	12.7	61	52	103	28.5	30
3/4"	20	70	61	111	34.8	36
1"	25	82	65	126	34.8	44.6
1-1/4"	32	91.5	79	154	38.1	54
1-1/2"	38	113	83	154	38.1	61
2"	50	124	97	191	38.1	75

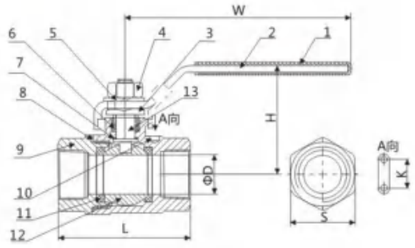

BALL VALVE

2PC BALL VALVE REDUCED 2000PSI (QF208)

FEATURES

- 2000PSKPN150)
- Reduce Port
- Investment Casting
- Blow-out proof Stem
- Tapped & drilled mounting pad (option)
- PED97/23/PE (CE0035) Approved
- Casting Approved AD2000-W0
- Thread: ASME B1.20.1 BS21 .DIN2999/259, ISO228-1, JIS B 0203, ISO7/1
- Inspection Testing: API598, EN12266



MATERIALS LIST

ITEM	DESIGNATION	MATERIAL
1	HANDLE SLEEVE	PVC
2	HANDLE	304
3	GLAND NUT	304/316
4	STEM NUT	304
5	SPRING WASHER	304
6	STEM PACKING	PTFE
7	THRUST WASHER	PTFE
8	JOING GASKET	PTFE
9	CAP	CF8/CF8M
10	BODY	CF8/CF8M
11	BALL SEAT	RPTFE
12	BALL	CF8/CF8M
13	STEM	304/316

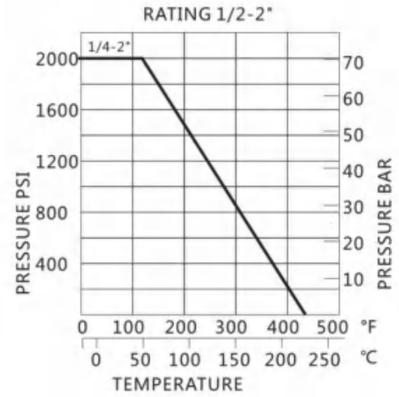

DIMENSIONS(mm)

SIZE	D	L	H	W	K	S	K	M
1/4"	11	58	48	105	28.5	26.5	27.5	10-32UN
3/8"	12.5	58	48	105	28.5	26.5	27.5	10-32UN
1/2"	12.5	58	48	105	28.5	26.5	27.5	10-32UN
3/4"	17.5	79.6	67	HO	34.8	32	34.8	10-32UN
1"	22	86	70	125	34.8	41	34.8	10-32UN
1-1/4"	25	103	85	150	38.1	50	34.8	10-32UN
1-1/2"	32	111	90	150	38.1	55	34.8	10-32UN
2"	38	137	95	190	38.1	70	34.8	10-32UN

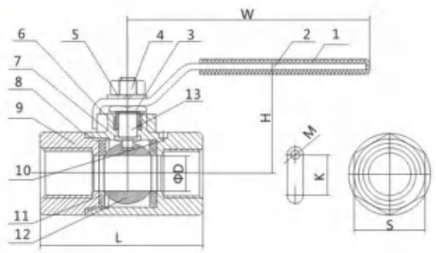

BALL VALVE

2PC BALL VALVE M/F (QF209)

FEATURES

- ▪1000PSI/PN63
- ▪Full Port
- ▪Investment Casting
- ▪Blow-out proof Stem
- ▪Locking Device Handle(Option)
- ▪PED97/23/PE (CE0035) Approved
- ▪Casting Approved AD2000-W0
- ▪Thread: ASME B1.20.1 BS21.DIN2999/259, ISO228-1JIS B0203, ISO7/1
- ▪Inspection Testing: API598, EN12266



MATERIALS LIST

ITEM	DESIGNATION	MATERIAL
1	HANDLE SLEEVE	PVC
2	HANDLE	304
3	GLAND NUT	304/316
4	STEM NUT	304
5	SPRING WASHER	304
6	STEM PACKING	PTFE
7	THRUST WASHER	PTFE
8	JOING GASKET	PTFE
9	CAP	CF8/CF8M
10	BODY	CF8/CF8M
11	BALL SEAT	RPTFE
12	BALL	CF8/CF8M
13	STEM	304/316

RATING 1/2-2"

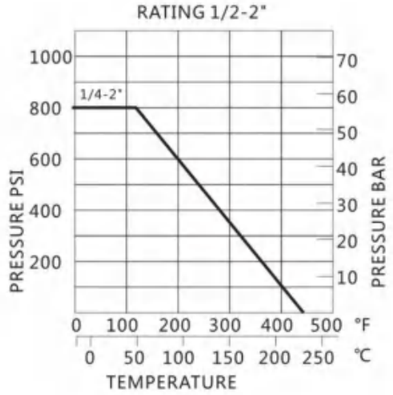

DIMENSIONS(mm)

SIZE	D	d	L	H	W	S
1/4"	11.6	8	55	48	91	19
3/8"	12.5	11.4	55	48	91	21
1/2"	15	13.6	71.5	52	91	25.5
3/4"	20	18.2	78	61	111	31
1"	25	23	91	65	111	37.5
1-1/4"	32	32	100	79	154	46.5
1-1/2"	38	38	H2	83	154	53.5
2"	50	48	142	97	192	66

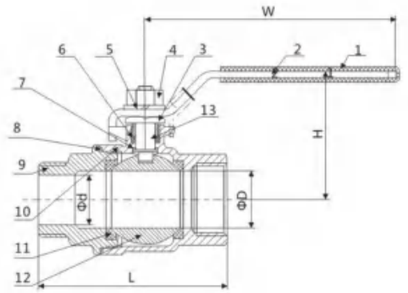

BALL VALVE

2PC BALL VALVE WITH IS05211 MOUNTING PAD(QF203M)

FEATURES

- ▪Full port 1000PSKPN63)
- ▪Investment Casting
- ▪Blow-out proof Stem
- ▪ISO5211 Mounting Pad
- ▪PED97/23/PE (CE0035) Approved
- ▪Anti-Static device(option)
- ▪Thread: ASME B1.20.1 BS21 .DIN2999/259, ISO228-1, JIS B 0203, ISO7/1
- ▪Inspection Testing: API598, EN12266



MATERIALS LIST

ITEM	DESIGNATION	MATERIAL
1	BODY	CF8/CF8M
2	CAP	CF8/CF8M
3	BALL	CF8/CF8M
4	STEM	304/316
5	BALL SEAT	RPTFE
6	THRUST WASHER	PTFE
7	JOINT GASKET	PTFE
8	STEM PACKING	PTFE
9	GLAND RING	304
10	SPRING WASHER	304
11	STEM NUT	304
12	AGAINST PINE PAD	304
13	HANDLE	304
14	HANDLE SLEEVE	PVC

RATING 1/4-4

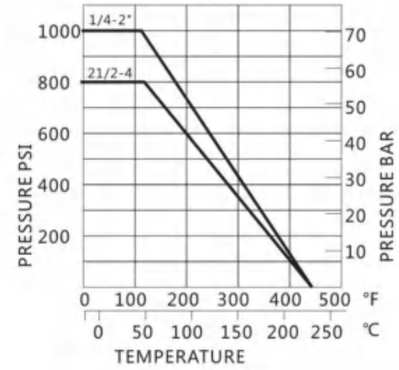

DIMENSIONS(mm)

SIZE	Φd	L	H	D	E	W	TSOS711
1/4"	11.6	49	36.5	9	9	12	F04/03
3/8"	12.5	49	36.5	9	9	12	F04/03
1/2"	15	58	37.8	9	9	12	F04/03
3/4"	20	65	42.5	9	9	12	F04/03
1"	25	77	45	11	11	14	F05/04
1-1/4"	32	90	51.5	11	11	14	F05/04
1-1/2"	38	98	59.5	14	14	18	F07/05
2"	50	121	68.5	14	14	18	F07/05
2 1/2"	64	156	98.5	17	16	22	F10/07
3"	76	186	108	17	16	22	F10/07

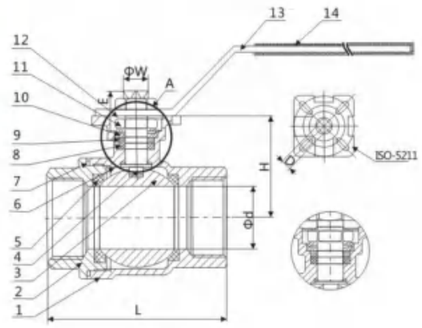

BALL VALVE

SWITCH TYPE SERIES ELECTRIC BALL VALVE



FEATURES

- Easy to disassemble,install and maintain,optional installation position.
- Small-sized,portable,compact configuration,gyration 90
- Small operation torque enhances flexibility and facilitates prompt turn on.
- Manual operation is available.
- A long service life with over several hundred thousands start/close tests.

Electric equipment form a complete set of three type of thread ball valve parameter list

SIZE	D	L1	L	H	H2	H
1/ 2 "	15	70	157.5	39	74	177
3/ 4 "	20	84	157.5	42	77	180
1 "	25	92	157.5	52	87	190
1-1/ 4 "	32	109	157.5	56	91	194
1-1/ 2 "	38	126	157.5	66	106	209
2 "	50	145	157.5	75	115	218
2-1/ 2 "	65	160	157.5	85	125	228
3 "	80	206	207	105	150	279
4 "	100	226	207	130	180	309

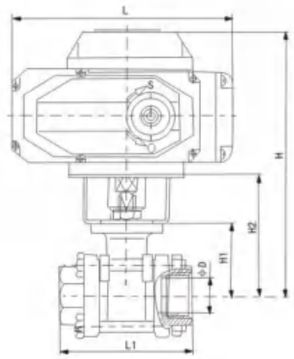

Electric device matching flanged ball valves parameter list

SIZE	d	L1	L2	L	H1	H2	H	C	D1	D
1/2"	13	108	45	157.5	33	76	179	70	51	95
3/4"	19	117	50	157.5	37	80	183	75	56	100
1"	25	127	51	157.5	46	93	196	90	67	125
1-1/4"	38	165	70.5	157.5	57.5	113.5	216.5	100	76	135
1-1/2"	38	165	70.5	157.5	57.5	113.5	216.5	105	81	140
2"	51	178	80.5	157.5	66	122	225	120	96	155
2-1/2"	64	190	87	157.5	84	152	255	140	116	175
3"	76	203	97	207	94	162	291	150	126	185
4"	102	229	116	207	121	197	326	175	151	210
5"	127	345	148	256	147	247	387.5	210	182	250
6"	152	394	173	256	167	267	407.5	240	212	280
8"	203	457	207	256	214	318	458.5	290	262	330

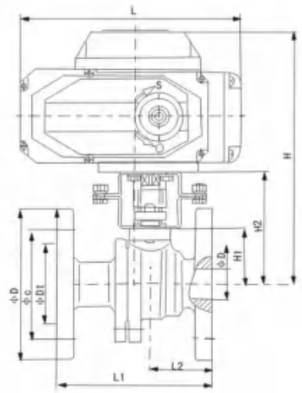

BALL VALVE

3PC BALL VALVE (QF301)



FEATURES

- 1000PSI/PN63
- Full Port
- Investment Casting
- Blow-out proof Stem
- Locking Device Handle(Option)
- PED97/23/PE (CE0035) Approved
- Anti-Static device(option)
- Thread: ASME B 1.20.1 BS21 .DIN2999/259, ISO228-1JIS B 0203, ISO7/1
- Inspection Testing: API598, EN12266

MATERIALS LIST

ITEM	DESIGNATION	QTY	MATERIAL
1	HANDLE SLEEVE	1	PVC
2	HANDLE	1	304
3	GLAND NUT	1	304/316
4	STEM NUT	1	304
5	STEM WASHER	1	304
6	STEM PACKING	1	PTFE
7	THRUST WASHER	1	PTFE
8	END CAP	2	CF8/CF8M
9	BOLT	4(6)	304
10	NUT	4(6)	304
11	SPRING WASHER	4(6)	304
12	BODY	1	CF8/CF8M
13	BALL SEAT	2	RPTFE
14	BALL	1	CF8/CF8M
15	STEM	1	304/316
16	LOCKING DEVICE	1	304

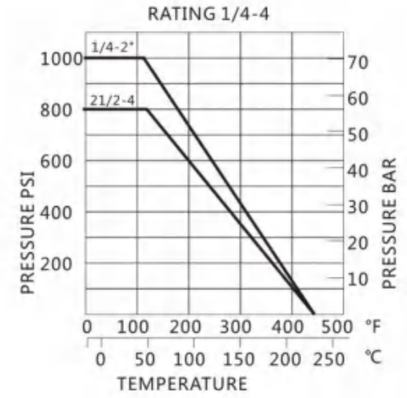

DIMENSIONS(mm)

SIZE	D	L	H	W
1/4"	11	50	48	103
3/8"	12	50	48	103
1/2"	15	60	52	103
3/4"	20	70	61	123
1"	25	80	65	123
1-1/4"	32	93	79	153
1-1/2"	38	100	83	153
2"	50	125	97	185
2 1/2"	64	158	135	243
3"	76	179	144	243
4"	94	223	172	315

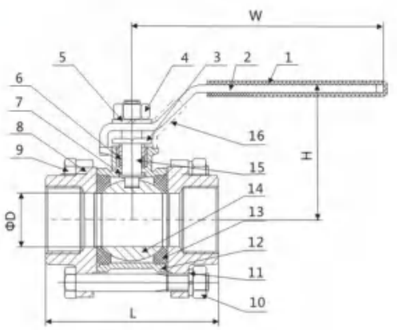

BALL VALVE

3PC BUTT WELD BALL VALVE (QF302)

FEATURES

- 1000PSI/PN63
- Full Port
- Investment Casting
- Blow-out proof Stem
- PED97/23/PE (CE0035) Approved
- Casting Approved AD2000-W0
- Anti-Static device(option)
- Butt WeldiASME B16.25 (SCH40)
- Inspection Testing: API598, EN12266



MATERIALS LIST

ITEM	DESIGNATION	QTY	MATERIAL
1	HANDLE SLEEVE	1	PVC
2	HANDLE	1	304
3	GLAND NUT	1	304
4	STEM NUT	1	304
5	SPRING WASHER	1	304
6	STEM PACKING	1	PTFE
7	THRUST WASHER	1	PTFE
8	JOINT GASKER	2	PTFE
9	CAP	2	CF8/CF8M
10	BOLT	4(6)	304
11	BOLT NUT	4(6)	304
12	SPRING WASHER	4(6)	304
13	BODY	1	CF8/CF8M
14	BALL SEAT	2	RPTFE
15	BALL	1	CF8/CF8M
16	STEM	1	304/316
17	LOCKING DEVICE	1	304

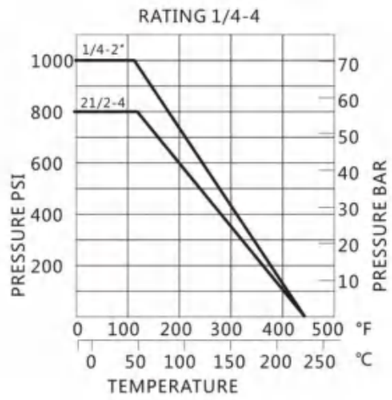

DIMENSIONS(mm)

SIZE	ΦA	ΦB	ΦC	ΦD	L	H	W
1/4"	18	14.5	10.8	10.8	60.4	48	103
3/8"	19.5	15.9	11	11	60.4	48	103
1/2"	23	19.2	15	15	66.5	52	103
3/4"	28.8	23.4	21	20	80	61	123
1"	34.8	28.6	26.7	25	84	65	123
1-1/4"	45	38	34	32	104	79	153
1-1/2"	51	44	40.5	38	112	83	153
2"	62.5	56.5	52.5	50	132	97	185
2 1/2"	77	68	65	64	160.2	135	243
3"	94	86	80.5	76	182.2	144	243
4"	116	105	98	94	226.8	172	315

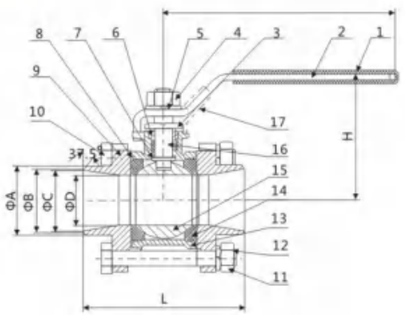

BALL VALVE

3PC SOCKET WELD BALL VALVE (QF303)

FEATURES

- 1000PSI/PN63
- Full Port
- Investment Casting
- Blow-out proof Stem
- PED97/23/PE (CE0035) Approved
- Casting Approved AD2000-W0
- Anti-Static device(option)
- Socket Weld: ASME B16.11
- Inspection Testi: API598, EN12266



MATERIALS LIST

ITEM	DESIGNATION	QTY	MATERIAL
1	HANDLE SLEEVE	1	PVC
2	HANDLE	1	304
3	GLAND NUT	1	304
4	STEN NUT	1	304
5	STEM WASHER	1	304
6	STEM PACKING	1	PTFE
7	THRUST WASHER	1	PTFE
8	JOINT GASKET	2	PTFE
9	END CAP	2	CF8/CF8M
10	BOLT	4(6)	304
11	NUT	4(6)	304
12	SPRING WASHER	4(6)	304
13	BODY	1	CF8/CF8M
14	BALL SEAT	2	RPTFE
15	BALL	1	CF8/CF8M
16	STEM	1	304/316
17	LOCKING DEVICE	1	304

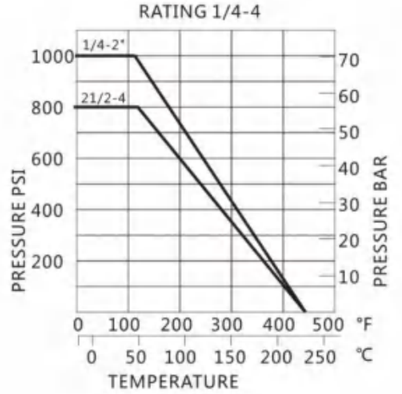

DIMENSIONS(mm)

SIZE	d	D	E	L	H	W
1/4"	12	14.2	10	50	48	103
3/8"	12	17.6	10	50	48	103
1/2"	15	21.7	10	60	52	103
3/4"	20	27.1	13	70	61	123
1"	25	33.9	13	80	65	123
1-1/4"	32	42.6	13	93	79	153
1-1/2"	38	48.7	13	100	83	153
2"	50	61.1	16	125	97	185
2 1/2"	64	77	16	158	135	243
3"	76	89.8	16	179	144	243
4"	94	115.5	19	223	172	315

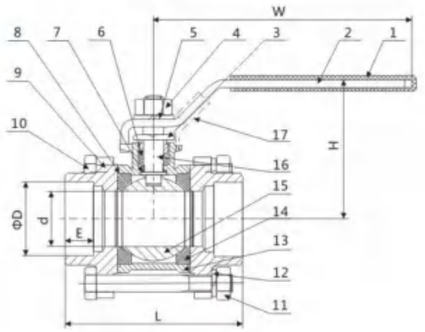

BALL VALVE

3PC DIN3202-M3 LENGTH BALL VALVE(QF304)

FEATURES

- 1000PSI/PN63
- Full Port
- Investment Casting
- Blow-out proof Stem
- PED97/23/PE (CE0035) Approved
- Casting Approved AD2000-W0
- Anti-Static device(option)
- Length Conform To DIN3202/4-M3
- Thread: ASME B 1.20.1 BS21 .DIN2999/259, ISO228-1, JIS B 0203, ISO7/1
- Inspection Testing: API598, EN12266



MATERIALS LIST

ITEM	DESIGNATION	QTY	MATERIAL
1	HANDLE SLEEVE	1	PVC
2	HANDLE	1	304
3	GLAND NUT	1	304
4	STEM NUT	1	304
5	STEM WASHER	1	304
6	STEM PACKING	1	PTFE
7	THRUST WASHER	1	PTFE
8	GASKET	2	PTFE
9	END CAP	2	CF8/CF8M
10	BOLT	1	304
11	NUT	4	304
12	SPRING WASHER	4	304
13	BODY	1	CF8/CF8M
14	BALL SEAT	2	RPTFE
15	BALL	1	CF8/CF8M
16	STEM	1	304/316
17	LOCKING DEVICE	1	304

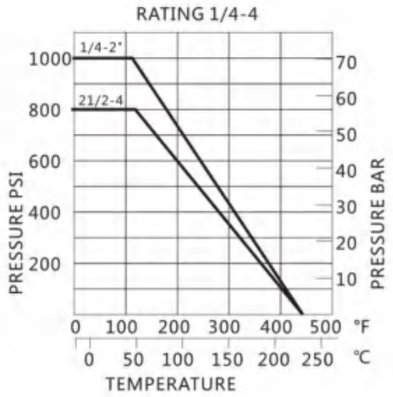

DIMENSIONS(mm)

SIZE	D	L	H	W	SW
1/4"	11.6	55	64	103	19
3/8"	12.7	60	64	103	21
1/2"	15	75	64	103	26
3/4"	20	80	73	103	31
1"	25	90	89.2	135	38
1-1/4"	32	110	94.5	135	47
1-1/2"	38	120	119.5	182	54
2"	50	140	128.5	182	66
2 1/2"	64	185	140	260	84
3"	76	205	147	260	99
4"	94	240	172	400	128

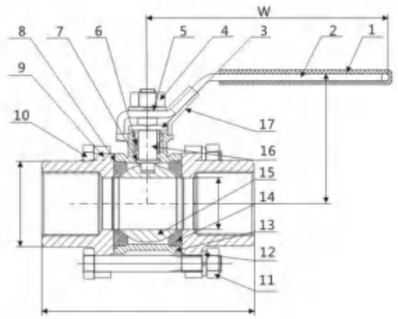

INOXCN
FOCUS ON STAINLESS STEEL

BALL VALVE

3PC REDUCED 3000PSI BALL VALVE (QF306)

FEATURES

- 3000PSI
- Reduce Port
- Investment Casting
- Blow-out proof Stem
- PED97/23/PE (CE0035) Approved
- Casting Approved AD2000-W0
- Anti-Static device(option)
- Thread: ASME B 1.20.1 BS21 .DIN2999/259, ISO228-1JIS B 0203, ISO7/1
- Inspection Testing: API598, EN12266



MATERIALS LIST

ITEM	DESIGNATION	QTY	MATERIAL
1	BODY	1	CF8/CF8M
2	END CAP	2	CF8/CF8M
3	BALL SEAT	2	RPTFE
4	BALL	1	CF8/CF8M
5	O-RING	2	VITON
6	JOINT GASKET	2	PTFE
7	THRUST WASHER	2	PTFE
8	O-RING	2	VITON
9	STEM PACKING	2	PTFE
10	BELLEVILLE WASHER	2	301
11	STEM NUT	2	304
12	HANDLE	1	304
13	STEM	1	304/316
14	HANDLE SLEEVE	1	PVC
15	STOP PIN	1	304
16	RING	1	304
17	BOLT	1	304

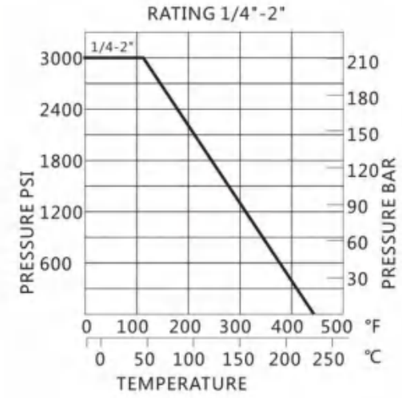

DIMENSIONS(mm)

SIZE	ΦD	L	H	W	A	B	MC	Q
1/4"	11	92.6	31.5	140	36	36	6	9
3/8"	12.5	92.6	B1.5	140	36	36	6	9
1/2"	12.5	92.6	31.5	140	36	36	6	9
3/4"	15	89.6	37	140	36	36	6	9
1"	20	112.8	46.5	160	42	42	6	11
1-1/4"	25	125	53	160	42	42	6	11
1-1/2"	32	165	65	185	70	50	8	14
2"	38	165	82	185	70	50	8	14

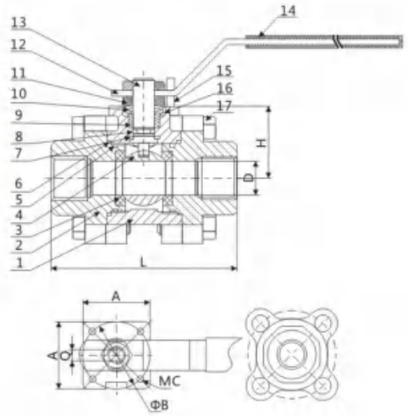

PNEUMATIC BALL VALVE



Summarize

The pneumatic ball valve is consisting of a three piece type ball valve and an actuator.

The actuators can be of dual function type or single function type.through which opening or closing of a ball valve can be realized via an electro-megnetic valve.

This product has been widely used in petroleum,chemical,food,hydro-power, metalurgical industries as well as water supply and drainage and water treatment and are highly corrosion-resistant.

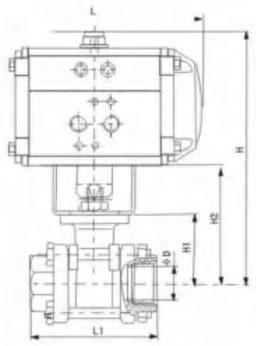

PNEUMATIC DEVICES SUPPORTING THE THREE TYPE OF THERAD BALL VALVE PARAMETER TABLE

SIZE	D	L1	L	H1	H2	
1/ 2 "	15	70	140.5	39	74	173
3/ 4 "	20	84	140.5	42	77	
1 "	25	92	158.5	52	87	202
1-1/ 4 "	32	109	158.5	56	91	
1-1/ 2 "	38	126	210.5	66	106	238
2 "	50	145	210.5	75	115	
2-1/ 2 "	65	160	210.5	85	125	257
3 "	80	206	247.5	105	150	
4 "	100	226	268.5	130	180	327

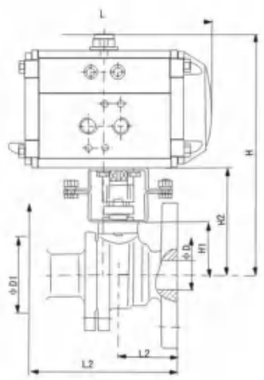

PNEUMATIC DEVICE MATCHING FLANGEB DALL VALVES PARAMETER LIST

SIZE	d	L1	L2	L	H1	H2	H	C		
1/ 2 "	13	108	45	140.5	33	76	165	70	51	95
3/ 4 "	19	117	50	140.5	37	80	169	75		
1 "	25	127	51	158.5	46	93	198	90	67	125
1-1/ 4 "	38	165	70.5	158.5	57.5	113.5	218.5	100		
1-1/ 2 "	38	165	70.5	210.5	57.5	113.5	235.5	105	81	140
2 "	51	178	80.5	210.5	66	122	244	120		
2-1/ 2 "	64	190	87	210.5	84	152	274	140	116	175
3 "	76	203	97	247.5	94	162	297	150		
4 "	102	229	116	268.5	121	197	344	175	151	210
5 "	127	356	148	315	147	247	422	210		
6 "	152	394	173	345	167	267	454	240	212	280
8 "	203	457	207	408.5	214	318	525	290		

3PC BALL VALVE WITH IS05211 MOUNTING PAD(QF302M)

FEATURES

- ▪1000PSI/PN63
- ▪Full Port
- ▪Investment Casting
- ▪Blow-out proof Stem
- ▪ISO5211 Mounting Pad
- ▪PED97/23/PE (CE0035) Approved
- ▪Anti-Static device(option)
- ▪Thread: ASME B 1.20.1 BS21 .DIN2999/259, ISO228-1, JIS B 0203; ISO7/1
- ▪Inspection Testing: API598, EN12266



MATERIALS LIST

ITEM	DESIGNATION	QTY	MATERIAL
1	BODY	1	CF8/CF8M
2	CAP	2	CF8/CF8M
3	BALL	1	CF8/CF8M
4	BALL SEAT	2	RPTFE
5	STEM	1	304/316
6	THRUST WASHER	1	PTFE
7	SPRING WASHER	4	304
8	BOLT NUT	4	304
9	STEM PACKING	i	PTFE
10	RING	i	304
11	BELLEVILLE WASHER	2	301
12	LOCK WASHER	1	304
13	STOP PIN	1	304
14	HANDLE NUT	2	304
15	HANDLE	1	304
16	HANDLE SLEEVE	1	PVC
17	WASHER	1	CF8/CF8M
18	O-RING	1	VITON
19	BOLT	4	304

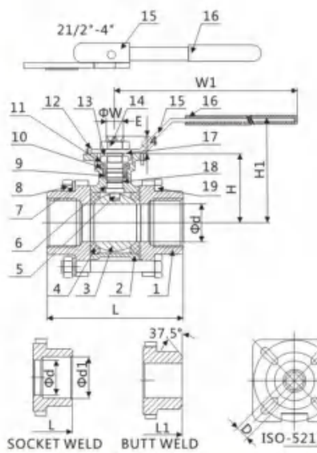

DIMENSIONS(mm)

SIZE	Φd±0.5	Φd1±0.5	L±2	L1±2	H±1	D-$^{0}_{0.07}$	E±1	W-$^{0}_{0.3}$	ISO5211	W1	H1
1/4"	11.6	14.2	55	70	38	9	9	12	F04/03	143	65
3/8"	12.5	17.7	60	70	38	9	9	12	F04/03	143	65
1/2"	15	21.8	75	70	38	9	9	12	F04/03	143	65
3/4"	20	27.2	80	85	47	9	9	12	F04/03	143	76
1"	25	34	90	95	60	11	11	14	F05/04	160	95
1-1/4"	32	42.7	110	110	62.7	11	11	14	F05/04	160	95
1-1/2"	38	48.8	120	120	79	14	14	18	F07/05	187	115
2"	50	61.2	140	142	88	14	14	18	F07/05	187	124
2 1/2"	64	74	185	185	109	17	17	22	F10/07	350	140
3"	76	90	205	205	116	17	17	22	F10/07	350	150
4"	94	115.6	240	240	142	22	22	28	F12/07	350	175

BALL VALVE

3WAY BALL VALVE WITH IS05211 MOUNTING PAD (QF401L/T)

FEATURES

- 1000PSI/PN63
- Reduce Port
- Investment Casting
- Blow-out proof Stem
- ISO5211 Mounting Pad
- PED97/23/PE (CE0035) Approved
- Anti-Static device(option)
- L or T Port Option
- 4 Sests For Rigid Ball Supporting
- Thread: ASME B 1.20.1 BS21 .DIN2999/259, ISO228-1, JIS B 0203, ISO7/1
- Inspection Testing: API598, EN12266



MATERIALS LIST

ITEM	DESIGNATION	QTY	MATERIAL
1	BODY	1	CF8/CF8M
2	CAP(1)	2	CF8/CF8M
3	CAP(2)	1	CF8/CF8M
4	BALL	1	CF8/CF8M
5	BALL SEAT	4	RPTFE
6	STEM	1	304/316
7	THUST WASHER	1	PTFE
8	STEM PACKING	1	PTFE
9	GLAND NUT	1	304
10	SPRING WASHER	2	304
11	NUT	2	304
12	HANDLE COVER	1	PVC
13	HANDLE	1	304/316
14	WASHER	1	304
15	THRUST WASHER	1	304
16	O-RING	1	VITON
17	JOINT GASKET	1	PTFE

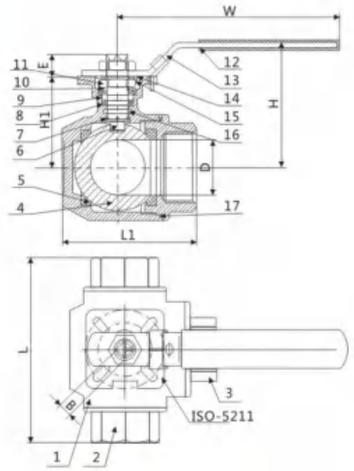

DIMENSIONS(mm)

SIZE	ΦD	W	L±2	L1±2	H	B-$^{0}_{0.07}$	E±1	ISO5211	H1
1/4"	9	139	79	64	73	9	9	F04/03	42
3/8"	11	139	79	64	73	9	9	F04/03	42
1/2"	12.5	139	79	64	73	9	9	F04/03	42
3/4"	16	139	83	68	80	9	9	F04/03	49
1"	20	160	104	82	95	11	11	F05/04	59.5
1-1/4"	25	160	111	90	98	11	11	F05/04	63
1-1/2"	32	185	126	106	110	14	14	F07/05	73.5
2"	38	185	147	123	119	14	14	F07/05	82.8

INOXCN
FOCUS ON STAINLESS STEEL

BALL VALVE

1PC WAFER BALL VALVE (QF101F)

FEATURES

- PN16/PN40
- Full Port
- Investment Casting
- Blow-out proof Stem
- PED97/23/PE (CE0035) Approved
- Casting Approved AD2000-W0
- Anti-Static device(option)
- Design: En12516
- End Flange: DIN2542-DIN2545
- Inspection Testing: API598, EN12266



MATERIALS LIST

ITEM	DESIGNATION	QTY	MATERIAL
1	HANDLE SLEEVE	1	PVC
2	HANDLE	1	304
3	STOP BLOCK	1	304
4	STEM NUT	2	304
5	SPRING WASHER	2	304
6	STEM RING	1	304
7	STEM PACKING	2	PTFE
8	STEM	1	304/316
9	THRUST WASHER	1	PTFE
10	CAP	1	CF8/CF8M
11	BALL	1	CF8/CF8M
12	BALL SEAT	2	RPTFE
13	JOINT GASKET	1	PTFE
14	BODY	1	CF8/CF8M

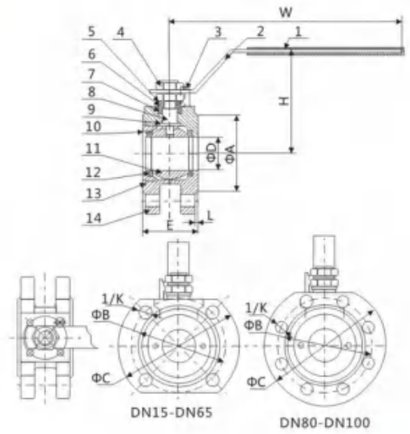

DIMENSIONS(mm)

SIZE	ΦA	ΦB	ΦC	ΦD	E	H	W	L	I/K	ISO5211	pressure class
DN15	45	65	90	15	37	70	120	2	4-M12	F03	PN40
DN20	58	75	105	20	40	73	120	2	4-M12	F03	
DN25	68	85	115	25	43	78	165	2	4-M12	F04	
DN32	78	100	140	32	51	85	165	3	4-M16	F04	
DN40	88	110	150	38	63	92	200	3	4-M16	F05	
DN50	102	125	165	50	81	100	200	3	4-M16	F05	
DN65	122	145	185	64	101	140	240	3	4-M16	F07	PN16
DN80	138	160	200	80	118	150	240	3	8-M16	F07	
DN100	158	180	220	97	150	170	265	3	8-M16	F10	

BALL VALVE

1PC WAFER FLANGED BALL VALVE WITH IS05211 MOUNTING PAD (QF101M)

FEATURES

- PN16
- Full Port
- Investment Casting
- Blow-out proof Stem
- ISO5211 Mounting Pad
- Locking Device Handle(Option)
- PED97/23/PE (CE0035) Approved
- Anti-Staticdevice(option)
- Design: En12516
- End Flange: DIN2542-DIN2545
- Inspection Testing: API598, EN 12266



MATERIALS LIST

ITEM	DESIGNATION	MATERIAL
1	BODY	CF8/CF8M
2	CAP	CF8/CF8M
3	BALL	CF8/CF8M
4	SEAL	RPTFE
5	STEM	304
6	STEM PACKING	PTFE
7	O-RING	NBR
8	STEM SEAT	PTFE
9	GLAND	304
10	SPRING WASHER	301
11	NUT	304
12	WASHER	304
13	HANDLE SLEEVE	PVC
14	HANDLE	304
15	LOCKING	304
16	BOLT	304
17	BOLT NUT	304
18	BOLT WASHER	304
19	BODY PACKING	PTFE

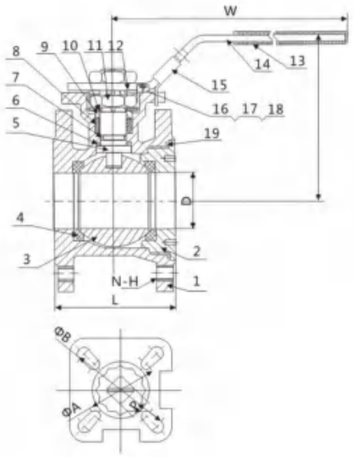

DIMENSIONS(mm)

SIZE	D	P	A	B	N-H	W	H	L	IS05211
DN15	15	9	36	42	4-M12	140	78	42	F04/03
DN20	20	9	36	42	4-M12	140	84	44	F04/03
DN25	25	11	42	50	4-M12	152	93	50	F04/03
DN32	32	11	42	50	4-M16	152	105	60	F04/03
DN40	38	14	50	70	4-M16	188	112	65	F05/04
DN50	50	14	50	70	4-M16	188	120	80	F05/04
DN65	65	17	70	102	4-M16	230	145	113	F07/05
DN80	76	17	70	102	8-M16	230	155	120	F07/05
DN100	94	22	102	102	8-M16	230	189	154	F10

INOXCN
FOCUS ON STAINLESS STEEL

BALL VALVE

2PC ANSI FLANGED BALL VALVE (QF201F)

FEATURES

- ANSI CLASS150
- Full Port
- Investment Casting
- Blow-out proof Stem
- PED97/23/PE (CE0035) Approved
- Casting Approved AD2000-W0
- Anti-Static device(option)
- Design: ASME B16.34
- End Flange:ASME B16.5
- Inspection Testing: API598



MATERIALS LIST

ITEM	DESIGNATION	QTY	MATERIALS
1	BODY	1	CF8/CF8M
2	CAP	1	CF8/CF8M
3	BALL	1	CF8/CF8M
4	BALL SEAT	2	RPTFE
5	JOINT GASKET	1	PTFE
6	STEM	1	304/316
7	THRUST WASHER	1	PTFE
8	STEM PACKING	1	PTFE
9	STOPPER	1	304
10	HANDLE	1	304
11	NUT	2	304
12-1	BOLT	1	304
12-2	PIN	1	304
13	STEM RING	1	304
14	BELLEVILLE WASHER	2	304
15	HANDLE SLEEVE	1	PVC
16	BOLT	4-8	304

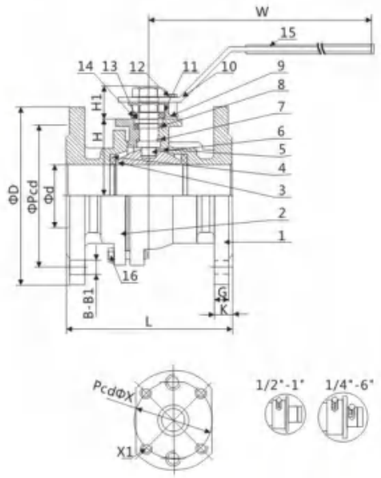

DIMENSIONS(mm)

SIZE	ΦD	CLASS-150										
		G	K	D	B	B1	L	H	H1	W	X	X1
1/2"	15	8.2	10.7	88	10.2	4	108	26.5	16.45	130	42	M5
3/4"	20	9.5	12	97	16.2	4	117.1	30.1	17.2	130	42	M5
1"	25	10.5	13	107	16.2	4	127	35.25	23.3	160	50	M6
1-1/4"	32	11.5	14	115	16.2	4	140	40.8	23.3	160	50	M6
1-1/2"	38	12.5	16	125	16.2	4	166	48	30.2	200	70	M8
2"	50	14	17.5	150.5	19.3	4	178	56.5	30.2	200	70	M8
2-1/2"	65	16.8	20.3	176	19.3	4	190	74.5	29.7	220	70	M8
3„	80	17.7	21	188.5	19 3	4	203	86	39.6	260	102	M10
4"	100	17.5	21	227	19.3	8	229	107.75	38.1	260	102	M10
5"	125	20	23	252	22	8	356	133.25	-	-	125	M12
6"	150	21	24	277	22	8	394	152.75	-	-	125	M12

BALL VALVE

2PC ANSI FLANGED BALL VALVE WITH DIRECT MOUNTING PAD (QF201M)

FEATURES

- ANSI CLASS150
- Full Port
- Investment Casting
- Blow-out proof Stem
- ISO5211 Mounting Pad
- PED97/23/PE (CE0035) Approved
- Anti-Static device(option)
- Design: ASME B16.34
- End Flange:ASME B16.5
- Inspection Testing: API598



MATERIALS LIST

ITEM	DESIGNATION	MATERIAL
1	BODY	CF8/CF8M
2	CAP	CF8/CF8M
3	BALL	CF8/CF8M
4	BALL SEAT	RPTFE
5	STEM	304/316
6	THRUST WASHER	PTFE
7	O-RING	NBR
8	V-RING PACKING	PTFE
9	GLAND	304
10	BELIEVLLE WASHER	301
11	NUT	304
12	WASHER	304
13	HANDLE	304
14	STOP BOLT	304
15	NUT	304
16	WASHER	304
17	HANDLE	304
18	HANDLE SLEEVE	PVC
19	LOCKING	304
20	BODY GASKET	PTFE
21	NUT	304
22	BOLT	304
23	TRIANGLE STOPPER	304
24	HANDLE ADAPTER	304
25	SET SCREWED	304
26	HANDLE	304
27	HANDLE SLEEVE	PVC

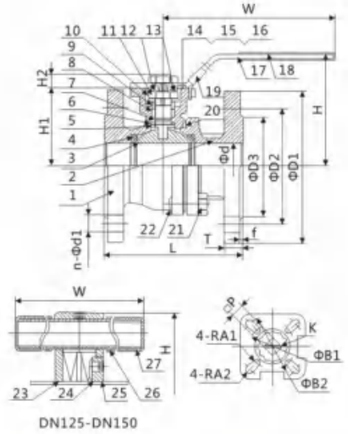

DN125-DN150

DIMENSIONS(mm)

SIZE	Φd	L	T	f	D1	D2	D3	n	Φd1	H1	H2	H	W	K	P	A1	A2	B1	B2
1/2"	15	108	9.7	1.6	89	60.5	35	4	16	48.3	8	80	140	M12x1.5	9	3	3	36	42
3/4"	20	117	10.5	1.6	98.6	70	43	4	16	53	8	85	140	M12x1.5	9	3	3	36	42
1"	25	127	11.2	1.6	108	79.2	51	4	16	58.5	11	95	160	M14x1.5	11	3	3.5	42	50
1-1/4"	32	140	12.7	1.6	117	88.9	63.5	4	16	71	11	108	160	M14x1.5	11	3	3.5	42	50
1-1/2"	38	165	14.7	2	125	98.4	73.2	4	16	76	14	114	185	M18x1.5	14	3.5	4.5	50	70
2"	50	178	16.3	2	150	120.7	92	4	19	84.5	14	124	185	M18x1.5	14	3.5	4.5	50	70
2-1/2"	65	190	17.9	2	180	139.7	104.7	4	19	101.5	17	148	230	M22x1.5	17	4.5	5.5	70	102
3„	76	203	19.5	2	190	152.4	127	4	19	111.5	17	158	230	M22x1.5	17	4.5	5.5	70	102
4"	100	229	24.3	2	230	190.5	157.2	8	19	141	22	191	230	M28x2	22	M10		102	
5"	120	356	24	2	254	216	186	8	22.4	160	40.5	242	500	M36x2	27	M12		125	
6"	150	394	25.4	2	279.4	241.3	216	8	22.4	184	40.5	270	800	M36x2	27	M12		125	

INOXCN
FOCUS ON STAINLESS STEEL

BALL VALVE

2PC DIN FLANGED BALL VALVE (QF203F)

FEATURES

- DIN PN16-40
- Full Port
- Investment Casting
- Blow-out proof Stem
- Locking Device Handle(Option)
- PED97/23/PE (CE0035) Approved
- Anti-Static device(option)
- Design:DIN3357,EN12516
- End Flange: DIN2501,PN10-40
- Face to Face: DIN3202-F4
- Inspection Testing: DIN3230/3, EN12266



MATERIALS LIST

ITEM	DESIGNATION	QTY	MATERIALS
1	BODY	1	1.4408/1.4308
2	CAP	1	1.4408/1.4308
3	BALL	1	1.4408/1.4308
4	BALL SEAT	2	RPTFE
5	STEM	1	304/316
6	BODY GASKET	1	PTFE
7	STEM PACKING	1	PTFE
8	V-RING PACKING	1	PTFE
9	GLAND	1	304
10	NUT	2	304
11	STOP PIN	1	304
12	HANDLE	1	304
13	HANDLE SLEEVE	1	PVC
14	NUT	4-8	304
15	BOLT	4-8	304

DIMENSIONS(mm)

SIZE	d	B	H	W	L	D3	D2	D1	T	f	d1	N	J	M1	BOLT NUMBER	
1/2"	15	11	80	160	115	45	65	95	16	2	14	4	42	M5	4	PN16 PN40
3/4"	20	11	90	160	120	58	75	105	18	2	14	4	42	M5	4	
1"	25	14	95	160	125	68	85	115	18	2	14	4	50	M6	4	
1-1/4"	32	14	105	160	130	78	100	140	18	2	18	4	50	M6	4	
1-1/2"	38	17	110	220	140	88	110	150	18	3	18	4	70	M8	4	
2"	50	17	118	220	150	102	125	165	18	3	18	4	70	M8	4	
2-1/2"	65	17	136	220	170	122	145	185	18	3	18	8	70	M8	6	PN16
3"	76	22	158	320	180	138	160	200	20	3	18	8	102	M10	6	
4"	94	22	178	320	190	158	180	220	20	3	18	8	102	M10	8	

BALL VALVE

2PC DIN FLANGED BALL VALVE WITH DIRECT MOUNTING PAD(QF203M)

FEATURES

- DIN PN16-40
- Full Port
- Investment Casting
- Blow-out proof Stem
- ISO5211 Mounting Pad
- PED97/23/PE (CE0035) Approved
- Anti-Static device(option)
- Design:DIN3357,EN12516
- End Flange: DIN2501/PN10-40
- Face to Face: DIN3202-F4(DN15-DN100)
- Inspection Testing: DIN3230/3, EN12266



MATERIALS LIST

ITEM	DESIGNATION	QTY	MATERIAL
1	BODY	1	1.4408/1.4308
2	CAP	1	1.4408/1.4308
3	BALL	1	1.4408/1.4308
4	BALL SEAT	2	RPTFE
5	STEM	1	304/316
6	THRUST WASHER	1	PTFE
7	O-RING	1	VITON
8	V-RING PACKING	1	PTFE
9	GLAND	1	304
10	BELIEVILLE WASHER	2	301
11	NUT	2	304
12	THRUST WASHER	1	304
13	WASHER	1	304
14	STOP PIN	1	304
15	HANDLE	1	304
16	HANDLE SLEEVE	1	PVC
17	BODY GASKET	1	PTFE
18	NUT	4-8	304
19	BOLT	4-8	304

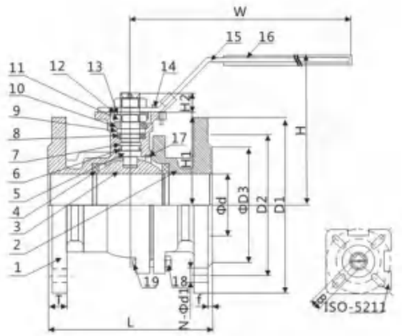

DIMENSIONS(mm)

SIZE	d	B	H	W	L	D3	D2	D1	T	f	d1	N	H1	H2	ISO5211	
1/2"	15	11	80	140	115	45	65	95	16	2	14	4	48	8	F04/03	PN16 PN40
3/4"	20	11	95	140	120	58	75	105	18	2	14	4	53	8	F04/03	
1"	25	14	95	160	125	68	85	115	18	2	14	4	58	11	F05/04	
1-1/4"	32	14	105	160	130	78	100	140	18	2	18	4	71	11	F05/04	
1-1/2"	38	17	114	190	140	88	110	150	18	3	18	4	76	14	F07/05	
2"	50	17	124	190	150	102	125	165	18	3	18	4	85	14	F07/05	
2-1/2"	65	17	148	230	170	122	145	185	18	3	18	8	101	17	F10/07	PN16
3"	76	22	158	230	180	138	160	200	20	3	18	8	111.5	17	F10/07	
4"	94	22	190	320	190	158	180	220	20	3	18	8	141	22	F12/10	

INOXCN
FOCUS ON STAINLESS STEEL

BALL VALVE

3PC DIN FLANGED BALL VALVE (QF301F)

FEATURES

- DIN PN16-40
- Full Port
- Investment Casting
- Blow-out proof Stem
- PED97/23/PE (CE0035) Approved
- Anti-Static device(option)
- Design:DIN3357,EN12516
- End Flange: DIN2501,PN10-40
- Face to Face: DIN3202-F1(DN15-DN100)
- Inspection Testing: DIN3230/3, EN12266



MATERIALS LIST

ITEM	DESIGNATION	QTY	MATERIAL
1	HANDLE SLEEVE	1	PVC
2	HANDLE	1	304
3	GLAND NUT	1	304
4	STEN NUT	1	304
5	STEM WASHER	1	304
6	STEM PACKING	1	PTFE
7	THRUST WASHER	1	PTFE
8	JOINT GASKET	2	PTFE
9	END GAP	2	CF8/CF8M
10	BOLT	4(6)	304
11	NUT	8(12)	304
12	SPRING WASHER	8(12)	304
13	BODY	1	CF8/CF8M
14	BALL SEAT	2	RPTFE
15	BALL	1	CF8/CF8M
16	STEM	1	304/316
17	LOCKING DEVICE	1	304

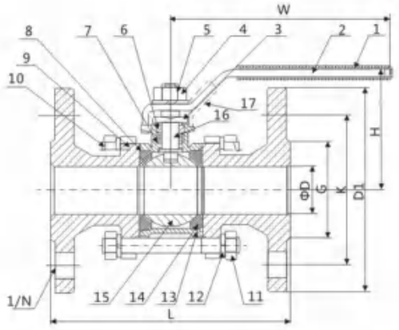

DIMENSIONS(mm)

SIZE	D	L	H	W	D1	K	G	I/N
1/2"	15	130	55	103	95	65	45	14/4
3/4"	20	150	61	103	105	75	58	14/4
1"	25	160	61	135	115	85	68	14/4
1-1/4"	32	180	78	135	140	100	78	18/4
1-1/2"	40	200	90	190	150	110	88	18/4
2"	50	230	97	190	165	125	102	18/4
2-1/2"	64	290	143	310	185	145	122	18/4
								18/8
3"	76	310	152	310	200	160	138	18/8
4"	100	350	187	400	220	180	158	18/8
					235	190	162	22/8

1/2-2 = PN40 2 1/2-4=PN16/RN40

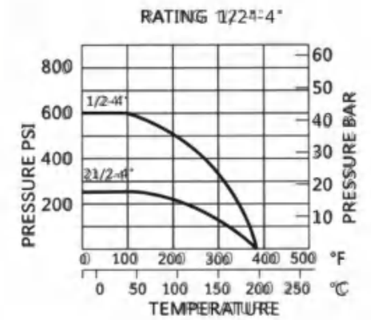

BALL VALVE

3PC DIN FLANGED BALL VALVE WITH ISO 5211 MOUNTING PAD (QF301M)

FEATURES

- DIN PN16-40
- Full Port
- Investment Casting
- Blow-out proof Stem
- ISO5211 Mounting Pad
- PED97/23/PE (CE0035) Approved
- Anti-Static device(option)
- Design:DIN3357,EN12516
- End Flange: DIN2501
- Face to Face: DIN3202-F1 (DN15-DN100)
- Inspection Testing: DIN3230/3, EN12266



MATERIALS LIST

ITEM	DESIGNATION	QTY	MATERIAL
1	BODY	1	CF8/CF8M
2	CAP	2	CF8/CF8M
3	BALL	1	CF8/CF8M
4	BALL SEAT	2	RPTFE
5	STEM	1	304/316
6	THRUST WASHER	1	304
7	O-RING	1	VITON
8	SPRING WASHER	4(6)	304
9	BOLT NUT	4(6)	304
10	STEM PACKING	1	PTFE
11	RING	1	304
12	BELIEVILLE WASHER	1	301
13	LOCK WASHER	1	301
14	STOP PIN	1	304
15	HANDLE NUT	1	304
16	HANDLE	1	304
17	HANDLE SLEEVE	1	PVC
18	WASHER	1	304
19	BOLT	4(6)	304

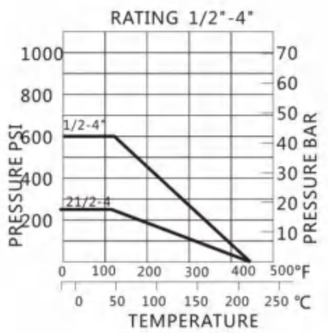

DIMENSIONS(mm)

SIZE	D	L	H	W	D1	K	G	I/N	ISO52H
1/2"	15	130	40	140	95	65	45	14/4	F04/03
3/4"	20	150	47	140	105	75	58	14/4	F04/03
1"	25	160	57	160	115	85	68	14/4	F05/04
1-1/4"	32	180	62	160	140	100	78	18/4	F05/04
1-1/2"	38	200	77	180	150	110	88	18/4	F07/05
2"	50	230	86	180	165	125	102	18/4	F07/05
2-1/2"	64	290	108	300	185	145	122	18/4	F10/07
								18/8	
3"	76	310	115	300	200	160	138	18/8	F10/07
4"	100	350	133	400	220	180	158	18/8	F12/10
					235	190	162	22/8	

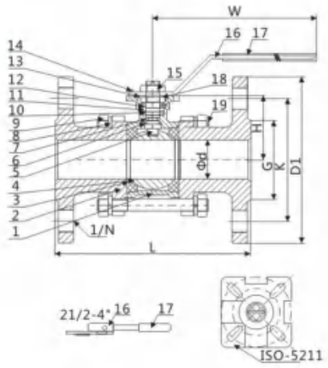

BALL VALVE

2PC BALL VALVE M/M (QF213)

FEATURES

- 1000PSI/PN63
- Full Port
- Investment Casting
- Blow-out proof Stem
- Locking Device Handle (Option)
- PED97/23/PE(CE0035) Approved
- Casting Approved AD2000-WO
- Thread : ASME B 1.20.1 BS21.DIN2999/259, ISO228-1, JISB0203, 1507/1
- Inspection Testing : API598 ,EN 12266



MATERIALS LIST

ITEM	DESIGNATION	QTY	MATERIAL
1	PLASTIC SLEEVE	1	PLASTIC
2	HANDLE	1	SUS304
3	GLAND NUT	1	SUS304
4	STEM NUT	1	SUS304
5	SPRING WASHER	1	SUS304
6	STEM PACKING	1	PTFE
7	THRUST WASHER	1	PTFE
8	JOINT GASKET	1	PTFE
9	CAP	1	CF8/CF8M
10	BODY	1	CF8/CF8M
11	BALL SEAT	2	PTFE
12	BALL	1	CF8/CF8M
13	STEM	1	SUS304/SUS316

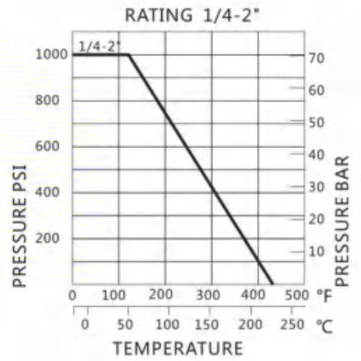

DIMENSIONS(mm)

SIZE	DN	d	L	H	W	S
1/4"	8	8	69	48	91	19
3/8"	10	11.4	71	48	91	21
1/2"	15	13.6	79	52	103	25.5
3/4"	20	18.2	94	61	111	31
1"	25	23	104	65	126	37.5
1 1/4"	32	32	122	79	154	46.5
1 1/2"	38	38	142	83	154	53.5
2"	50	48	168	97	192	66

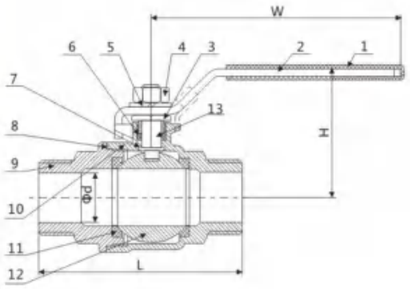

BALL VALVE

3PC SANITARY BUTT WELD BALL VALVE (QF305)

FEATURES

- Standard Port
- Investment Casting
- Material: CF8/CF8M
- Working Pressure : 1000WOG(1/2"-2")
  800WOG(21/2"-4")
- Ball Seat: With Cavity Filled PTFE
- Size Rating: 1/2"~4"
- End Connections: Tube End(US/3A)
- Options: Locking Device



MATERIALS LIST

ITEM	DESIGNATION	QTY	MATERIAL
1	PLASTIC SLEEVE	1	PLASTIC
2	HANDLE	1	304
3	GLAND NUT	1	304
4	STEM NUT	1	304
5	STEM WASHER	1	304
6	STEM PACKING	1	PTFE
7	THRUST WASHER	1	PTFE
8	END CAP	1	304/316
9	BOLT	4-6	304
10	NUT	4-6	304
11	SPRING WASHER	4-6	304
12	BODY	1	304/316
13	BALL SEAT	2	PTFE
14	BALL	1	304/316
15	STEM	1	304
16	LOCKING DEVICE	1	304

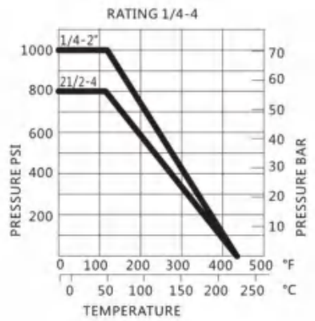

DIMENSIONS(mm)

SIZE	D	L	L1	H	W	BW
1/2"	10.2	82.5	20	55	103	12.7
3/4"	15.8	87.5	20	63	103	19.1
1"	22.1	96	20	70	135	25.4
1-1/4"	28.5	104	20	76	135	25.4
1-1/2"	34.8	118	20	89	182	38.2
2"	47.5	131.7	20	97	182	50.8
2-1/2"	60.2	158.5	20	143	260	63.4
3"	72.9	178.8	20	152	260	76.2
4"	97.4	210.5	20	187	400	101.6

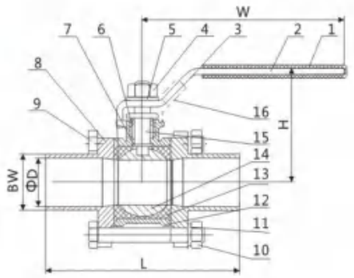

BALL VALVE

3PC SANITARY LONG-BUTT WELD BALL VALVE WITH DIRECTING MOUNTING PAD (QF305M)

FEATURES

- Standard Port
- Investment Casting
- Material : CF8/CF8M
- Working Pressure : 1000WOG(1/2"-2")
  800WOG(21/2"-4")
- Ball Seat: With Cavity Filled PTFE
- Size Rating :1/2"-4"
- End Connections : Tube End(US/3A)
- With ISO5211 Direct Mounting Pad
- Options : Locking Device



MATERIALS LIST

ITEM	DESIGNATION	QTY	MATERIAL
1	BODY	1	CF8/CF8M
2	CAP	1	CF8/CF8M
3	BALL	1	CF8/CF8M
4	SEAT	2	PTFE
5	STEM	1	SUS304
6	THRUST WASHER	1	PTFE
7	SPRING WASHER	4(6)	SUS304
8	BOLT NUT	4(6)	SUS304
9	STEM PACKING	1	PTFE
10	RING	1	SUS304
11	BELLEVILLE WASHER	2	SUS304
12	LOCK WASHER	1	SUS304
13	STOP PIN	1	SUS304
14	HANDLE NUT	2	SUS304
15	HANDLE	1	SUS304
16	HANDLE SLEEVE	1	PLASTIC
17	WASHER	1	SUS304
18	O-RING	1	VITON
19	BOLT	4(6)	SUS304

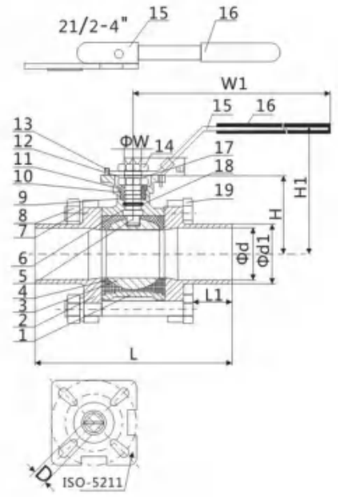

DIMENSIONS(mm)

SIZE	ΦD	ΦD1	L	L1	H	D	E	W	ISO5211	W1	H1
1/2"	10.2	12.7	82.5	20	38	9	9	12	F04/03	143	65
3/4"	15.8	19.1	87.5	20	47	9	9	12	F04/03	143	76
1"	22.1	25.4	96	20	60	11	11	14	F05/04	168	95
1-1/4"	25.4	28.5	104	20	62.7	11	11	14	F05/04	168	95
1-1/2"	34.8	38.2	118	20	79	14	15	18	F07/05	190	115
2"	47.5	50.8	131.7	20	88	14	15	18	F07/05	190	124
2-1/2"	60.2	63.4	158.5	20	109.1	17	17	22	F10/07	350	140
3"	72.9	76.2	178.8	20	116.2	17	17	22	F10/07	350	150
4"	97.4	101.6	210.5	20	142	22	22	28	F12/10	350	175

BALL VALVE

3PC SANITARY LONG-BUTT WELD BALL VALVE (QF306)

FEATURES

- Standard Port
- Investment Casting
- Material: CF8/CF8M
- Working Pressure : 1000WOG(1/2"-2")
  800WOG(21/2"~4")
- Ball Seat: With Cavity Filled PTFE
- Size Rating : 1/2"-4"
- End Connections : Tube End(US/3A)
- Options: Locking Device



MATERIALS LIST

ITEM	DESIGNATION	QTY	MATERIAL
1	PLASTIC SLEEVE	1	PLASTIC
2	HANDLE	1	304
3	GLAND NUT	1	304
4	STEM NUT	1	304
5	STEM WASHER	1	304
6	STEM PACKING	1	PTFE
7	THRUST WASHER	1	PTFE
8	END CAP	1	304/316
9	BOLT	4-6	304
10	NUT	4-6	304
11	SPRING WASHER	4-6	304
12	BODY	1	304/316
13	BALL SEAT	2	PTFE
14	BALL	1	304/316
15	STEM	1	304
16	LOCKING DEVICE	1	304

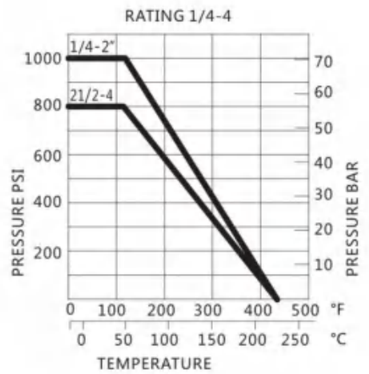

DIMENSIONS(mm)

SIZE	D	L	H	W	BW
1/2"	10.2	135	55	103	12.7
3/4"	15.8	135	63	103	19.1
1"	22.1	152	70	135	31.8
1-1/4"	28.5	157	76	135	25.4
1-1/2"	34.8	190	89	182	38.2
2"	47.5	204	97	182	50.8
2-1/2"	60.2	254	143	260	63.4
3"	72.9	280	152	260	76.2
4"	97.4	306	187	400	101.6

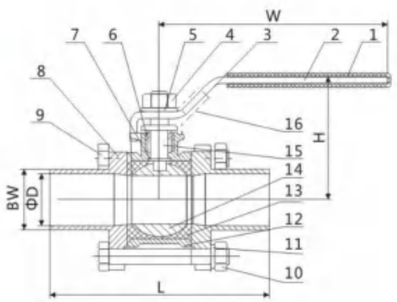

INOXCN
FOCUS ON STAINLESS STEEL

BALL VALVE

2PC JIS FLANGED BALL VALVE (QF202FM)

FEATURES

- JIS 10K
- Full Port
- Investment Casting
- BLOW-OUT Proof Stem
- IS05211 Mounting Pad
- PED97/23/EC (CE0035) Approves
- Casting Approved AD2000-WO
- Design: JIS B2002
- End Flange: JIS B2238
- Inspection Testing: JIS B2003 API598



MATERIALS LIST

ITEM	DESIGNATION	QTY	MATERIAL
1	BODY	1	SCS13A/SCS14A
2	CAP	1	SCS13A/SCS14A
3	BALL	1	SUS304/316
4	BALL SEAT	1	PTFE
5	STEM	1	SUS304
6	STEM PACKING	1	PTFE
7	O-RING	1	NBR
8	V-RING PACKING	1	PTFE
9	GALND	1	SUS304
10	BODY GASKET	1	PTFE
11	NUT	4-8	SUS304
12	BOLT	4-8	SUS304
13	GLAND	1	SUS304
14	STOPPER	1	SUS304
15	SNAPPING	1	SUS304
16	HANDLE	1	SUS304

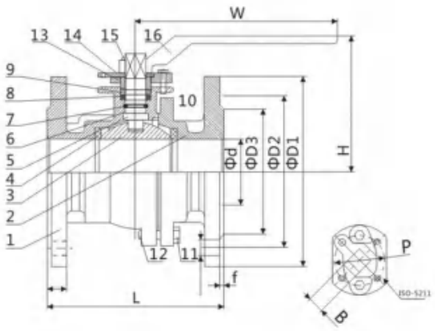

DIMENSIONS(mm)

SIZE	d	L	H	W	D3	D2	D1	T	f	M	N	P	B
1/2"	15	108	70	130	51	70	95	12	1	15	4	42	9
3/4"	20	117	76	130	56	75	100	14	1	15	4	42	9
1"	25	127	86	160	67	90	125	14	1	19	4	50	11
1-1/4"	32	140	91	160	76	100	135	16	2	19	4	50	11
1-1/2"	38	165	119	200	81	105	140	16	2	19	4	70	14
2"	50	178	127	200	96	120	155	16	2	19	4	70	14
2-1/2"	65	190	136	200	116	140	175	18	2	19	4	102	17
3"	76	203	164	325	126	150	185	18	2	19	8	102	17
4"	100	229	178	325	151	175	210	18	2	19	8	102	22

BALL VALVE

2PC JIS FLANGED BALL VALVE WITH DIRECT IS05211 MOUNTING PAD (QF202FDM)

FEATURES

- JIS10K
- Full Port
- Investment Casting
- BLOW-OUT Proof Stem
- IS05211 Mounting Pad
- PED97/23/EC (CE0035) Approves
- Casting Approved AD2000-WO
- Design: JIS B2002
- End Flange: JIS B2238
- Inspection Testing: JIS B2003 API598



MATERIALS LIST

ITEM	DESIGNATION	QTY	MATERIAL
1	BODY	1	1.4408/1.4308
2	CAP	1	1.4408/1.4308
3	BALL	1	1.4408/1.4308
4	BALL SEAT	2	PTFE
5	STEM	1	SUS304
6	STEM PACKING	1	PTFE
7	O-RING	1	NBR
8	V-RING PACKING	1	PTFE
9	STEM RING	1	SUS304
10	BELIEVILLE WASHER	2	SUS301
11	NUT	2	SUS304
12	THRUST WASHER	1	SUS304
13	WASHER	1	SUS304
14	STOP PIN	1	SUS304
15	HANDLE	1	SUS304
16	PLASTIC COVER	1	PLASTIC
17	BODY GASKET	1	PTFE
18	NUT	4-8	SUS304
19	BOLT	4-8	SUS304

DIMENSIONS(mm)

SIZE	d	L	H	H1	H2	W	D3	D2	D1	T	f	M	N	P2	P1	B
1/2"	15	108	80	48	9	130	51	70	95	12	1	15	4	42	36	9
3/4"	20	117	85	53	9	130	56	75	100	14	1	15	4	42	36	9
1"	25	127	100	64	11	160	67	90	125	14	1	19	4	50	42	11
1-1/4"	32	140	108	71	11	160	76	100	135	16	2	19	4	50	42	11
1-1/2"	38	165	114	76	14	200	81	105	140	16	2	19	4	70	50	14
2"	50	178	124	85	14	200	96	120	155	16	2	19	4	70	50	14
2-1/2"	65	190	148	102	17	200	116	140	175	18	2	19	4	102	70	17
3"	76	203	158	112	17	325	126	150	185	18	2	19	8	102	70	17
4"	100	229	189	141	22	325	151	175	210	18	2	19	8	102	-	22

Y-STRAINER

Y-STRAINER (QF502)

FEATURES

- 800PSI(PN40)
- Investment Casting
- PED97/23/PE (CE0035) Approved
- Casting Approved AD2000-W0
- Thread: ASME B1.20.1 BS21 .DIN2999/259, ISO228-1JIS B 0203, ISO7/1
- Inspection Testing: DIN3230/3, EN12266



MATERIALS LIST

ITEM	DESIGNATION	QTY	MATERIAL
1	BODY	1	CF8/CF8M
2	GASKET	1	304/316
3	SCREEN	1	304/316
4	CAP	1	CF8/CF8M

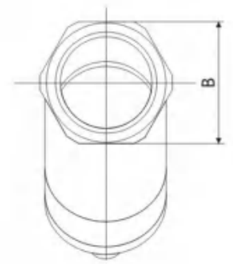

DIMENSIONS(mm)

SIZE	A	B	H	L	W	d
1/4"	15	26	58	65	2	1
3/8"	15	26	58	65	2	1
1/2"	15	26	58	65	2	1
3/4"	20	33	68	78.5	2	1
1"	25	41	88	89	2	1
1-1/4"	32	49	100	105	2	1
1-1/2"	40	56	108	120	2	1
2"	50	69	130	140	2	1

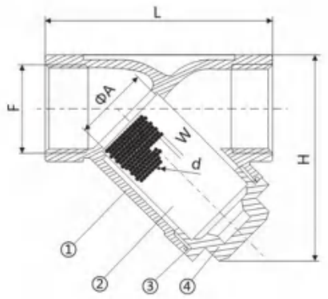

Y-STRAINER

Y-SPRING CHECK VALVE (QF503)

FEATURES

- ▪800PSI(PN40)
- ▪Investment Casting
- ▪PED97/23/PE (CE0035) Approved
- ▪Casting Approved AD2000-W0
- ▪Thread: ASME B 1.20.1 BS21.DIN2999/259, ISO228-1JIS B0203, ISO7/1
- ▪Inspection Testing: DIN3230/3, EN12266



MATERIALS LIST

ITEM	DESIGNATION	QTY	MATERIAL
1	BODY	1	CF8/CF8M
2	NUT	1	304
3	DISC SEAT	1	PTFE
4	DISC	1	CF8/CF8M
5	SPRING	1	304
6	GASKET	1	PTFE
7	BONNET	1	CF8/CF8M

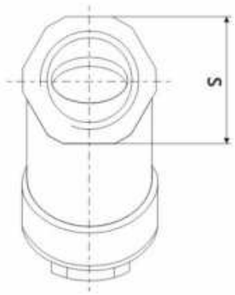

DIMENSIONS(mm)

SIZE	A	H	L	S
1/4"	15	58	65	26
3/8"	15	58	65	26
1/2"	15	58	65	26
3/4"	20	68	78.5	33
1"	25	88	89	41
1-1/4"	32	100	105	49
1-1/2"	40	108	120	56
2"	50	130	140	69

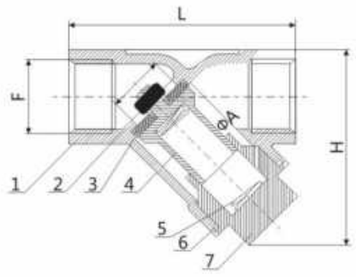

Y—STRAINER

Y—STRAINER (QF504)

FEATURES

- ▪800PSI(PN40)
- ▪Investment Casting
- ▪PED97/23/PE(CE0035) Approved
- ▪Casting Approved AD2000-WO
- ▪Thread: ASME B1.20.1 BS21.DIN2999/259 ISO228-1JIS B0203,ISO7/1
- ▪Inspection Testing:API 598,EN12266



MATERIALS LIST

ITEM	DESIGNATION	QTY	MATERIAL
1	BODY	1	CF8M/CF8
2	SCREEN	1	SUS304
3	GASKET	1	PTFE
4	CAP	1	CF8M/CE8
5	GASKET	1	PTFE
6	DISCHARGE PLUG	1	CF8M/CF8

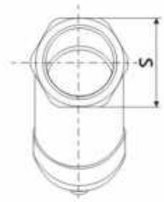

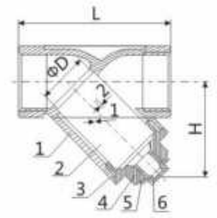

DIMENSIONS(mm)

SIZE / ITEM	1/4-3/8'	1/2'	3/4"	1"	11/4"	11/2"	2"	2 1/2"	3"	4"
D	12	15	20	25	32	40	50	65	76	94
H	65	65	80	90	104	120	138	183	198	238
L	42	42	51	65	66	75	86	112	123	163

CKECK VALVE

STAINLESS STEEL PNEUMATIC ANGLE SEAT VALVE

FEATURES

- ■800PSI(PN40)
- ■Investment Casting
- ■PED97/23/PE (CE0035) Approved
- ■Casting Approved AD2000-W0
- ■Thread: ASME B 1.20.1 BS21.DIN2999/259, ISO228-1JIS B0203, ISO7/1
- ■Inspection Testing: DIN3230/3, EN12266



- •Large flux, low resistance, no water-hammer
- •Y-type shape enlarged the flowing section, which could raise the flux by 30% and make flow more smooth.
- •Super Long Life
- •Which help the stem adjust and lubricate itself automatically.
- •The cylinder material is stainless steel. Lubricating automatically,360° rolling freely.

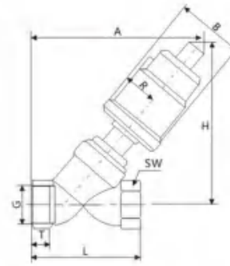

Threaded Connection

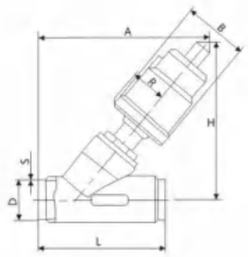

Welded Connection

Dimension

规格 Size	执行器 Actuator (mm)	B	R	H	螺纹式 Threaded Connection					焊接式 Welded Connection									
												DIN11850-2		DIN11850-3		SMS53008			
					G	T	A	L	SW	A	L	D	S	D	S	A	L	D	L
DN10	40	50.5	27	112	3/8"	12	124	68	27	-	-	-	-	-	-	-	-	-	-
	50	60	33	125			135			-	-	-	-	-	-	-	-	-	-
DN15	40	50.5	27	112	1/2"	15	124	68	27	118	70	19	1.5	20	2	127	75	1.8	1
	50	60	33	125			135			128						138			
DN20	50	60	33	132	3/4"	16	140	75	32	135	82	23	1.5	24	2	145	95	25	1.2
DN25	50	60	33	136	1"	17	150	90	40	150	100	29	1.5	30	2	165	130	32	1.2
	63	75	41	162			172			175						188			
DN32	63	75	41	174	11/4"	21	190	116	50	186	125	35	1.5	36	2	200	145	33.7	1.2
	80	106	55	223			235			232						245			
DN40	63	75	41	175	11/2"	21	190	116	56	190	130	41	1.5	42	2	210	160	38	1.2
	80	106	55	223			235			235						255			
DN50	63	75	41	183	2"	22	205	138	69	206	155	53	1.5	54	2	224	175	51	1.2
	80	106	55	232			250			250						265			
	100	148	74	287			294			250						265			
DN65	80	106	55	265	21/2"	26	285	178	85	-	-	-	-	-	-	-	-	-	-
	100	148	74	302			320			-	-	-	-	-	-	-	-	-	-
DN80	100	148	74	313	3"	27	372	210	100	-	-	-	-	-	-	-	-	-	-

CKECK VALVE

INOXCN
FOCUS ON STAINLESS STEEL

TWO POSITION TWO WAY ANGLE SEAT CONTROL VALVE

Y-SPECIFICATIONS



Product characters:

- * New technology new craft,new structure,its service life is 5-10 times longer than the ball valve,and cost is more economical by 50%.
- * The structure can be widely used,wigh big flow,water hammer resistance,impact resistance and stable opening.
- * Self-adjusting double-sealing grand,with the self-compensation function during abrasion,which is safe and reliable.
- * Provided stainless steel cylinder cover on the inner walls of cylinder,which has excellent perform ance of adrasion-proof,The reasonable structure,advanced design,excellent quality and extended service life make it the best and ideal product.

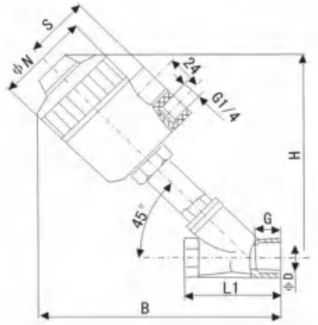

JOINT HOLE

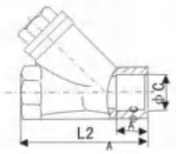

SOCKET WELD

MATERIAL LIST

1	Size Of Hole	DN15--DN65(MM)
2	Valve Body Material	SUS 304/316/316L
3	Threaded Connections	NPT、BSPT、BSP、NPSM
4	Socket Weld	ANSI B 16、11、DIN3239PART2
5	Actuator Material	PA、PSS+ Stainless Steel Bush
6	Sealing Material	PTEE、TFM1600
7	Applicable Medium	Water、Nevtral、Steam
8	Viscosity	MAX x 600MM²/S
9	Medium Temperature	-10℃~+180℃
10	Environment Temperatuer	-10℃~+60℃
11	Operating Pressure	3bar~10bar
12	Control mode	Keep Close Keep Open Both Directions
13	Working Pressure	0~40bar

MAIN PARAMETERS

SIZE	ΦD	ACTUATOR (Φmm)	B	ΦN	S	H	G	L1	ΦC	Flow value (CV)(CM³/H)	CAN BE PROVIDED ACCORDING TO THE ORDER AND NEED OF CUSTOMER (Φmm)		
1/ 2 "	15	50	165	65	44	136	14	65	21.7	5.4	40		
3/ 4 "	20	50	170	65	44	146	14	75	27.1	10.0	40	63	
1 "	25	63	205	83	53	175	14	90	33.8	15.2	50	80	
1-1/ 4 "	32	63	225	83	53	185	16	110	42.5	23.0	63	80	100
1-1/ 2 "	40	80	245	105	64	215	18	120	48.6	41.0	63	100	
2 "	50	100	315	130	76	270	20	150	61.1	71.0	63	80	125
2-1/ 2 "	65	125	375	155	89	317	22	185	73.8	108.0	80	100	

TWO POSITION TWO WAY ANGLE SEAT CONTROL VALVE

T-SPECIFICATIONS



Product characters:

* New technology new craft,new structure,its service life is 5-10 times longer than the ball valve,and cost is more economical by 50%.
* The structure can be widely used,wigh big flow,water hammer resistance,impact resistance and stable opening.
* Self-adjusting double-sealing grand,with the self-compensation function during abrasion,which is safe and reliable.
* Provided stainless steel cylinder cover on the inner walls of cylinder,which has excellent perform ance of adrasion-proof,The reasonable structure,advanced design,excellent quality and extended service life make it the best and ideal product.

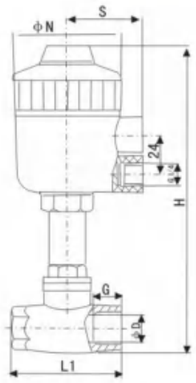

THREAD INTERFACE

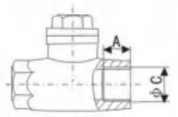

SOCKET WELD

MATERIAL LIST

1	Size of hole	DN15-DN65(MM)
2	Valve Body Material	SUS 304/316/316L
3	Threaded connections	NPT、BSPT、BSP、NPSM
4	Socket Weld	ANSI B 16、11、DIN3239PART2
5	Actuator Material	PA、PSS+ Stainless Steel Bush
6	Sealing material	PTEE、TFM1600
7	Applicable medium	Water、Nevtral、Steam
8	Viscosity	MAX x 600MM²/S
9	Medium Temperature	-10℃~+180℃
10	Environment Temperatuer	-10℃~+60℃
11	Operating pressure	3bar~10bar
12	Control mode	Keep Close Keep Open Both Directions
13	Working Pressure	0~40bar

MAIN PARAMETERS

SIZE	ΦD	ACTUATOR (Φmm)	A	ΦN	S	H	G	L2	ΦC	Flow value (CV)(CM³/H)	CAN BE PROVIDED ACCORDING TO THE ORDER AND NEED OF CUSTOMER (Φmm)		
1/ 2 "	15	50	10	65	44	183	14	65	21.7	5.4	40		
3/ 4 "	20	50	13	65	44	193	14	75	27.1	10.0	40	63	
1 "	25	63	13	83	53	222	14	90	33.8	15.2	50	80	
1-1/ 4 "	32	63	13	83	53	232	16	110	42.5	23.0	63	80	100
1-1/ 2 "	40	80	13	105	64	262	18	120	48.6	41.0	63	100	
2 "	50	100	16	130	76	317	20	150	61.1	71.0	63	80	125
2-1/ 2 "	65	125	16	155	89	364	22	185	73.8	108.0	80	100	

LNTERNAL THREAD GLOBE VALVE



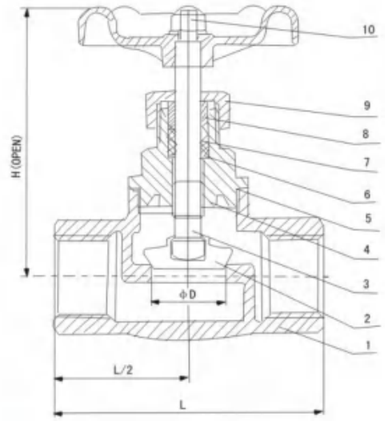

STANDARD
Design: ANSIB 16.34
Testing: API 598

APPLICATION
For general chemical and industrial services
Working pressrue: 1.6MPa、200PSI
Applicable Medium: Water、Oil、Gas
Body Material: CF8、CF8M、CF3M

Main parameters

SIZE	d	L	H	W
1/ 2 "	15	65.5	107	0.405
3/ 4 "	20	75	107	0.65
1 "	25	90	123	0.94
1-1/ 4 "	32	104.5	132	1.435
1-1/ 2 "	40	119	163	2.175
2 "	50	140	176	2.97

Material list

	部件名称	Part Name	材料 Material
1	阀体	Body	CF8M
	阀瓣	Disc	CF8M
3	阀杆	Stem	316
	阀盖	Cover	CF8M
5	密封垫	Sealing Gasket	R-PTFE
	平垫	Washer	304
7	填料	Packing	R-PTFE
	压环	Gland	304
9	压盖	Gland	CF8M
	螺母	Nut	304
11	手轮	Handwheel	AL

CKECK VALVE

GLOBE VALVE (QF801)

FEATURES

- ▪200PSI/PN16
- ▪Investment Casting
- ▪PED97/23/EC(CE0035)Approved
- ▪Casting Approved AD2000-WO
- ▪Rising stem
- ▪Thread: ASME B 1.20.1 BS21.DIN2999/259 ISO228-1JS B 0203,ISO7/1
- ▪Inspection Testing:API598,EN 12266



MATERIALS LIST

ITEM	DESIGNATION	MATERIAL
1	BODY	CF8/CF8M
2	PETAL	CF8/CF8M
3	STEM	304
4	GASKET	PTFE
5	CAP	CF8/CF8M
6	WASHER	304
7	BONNET	CF8/CF8M
8	HANDWHEEL	ALUMINUM ALLOY
9	NUT	304
10	WASHER	304
11	RING	304
12	STEM PACKING	PTFE

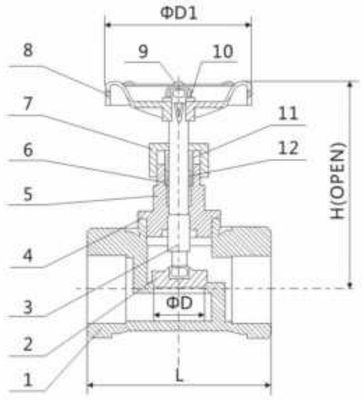

DIMENSIONS(mm)

SIZE / ITEM	1/2'	3/4'	1'	1 1/4'	1 1/2'	2'
D	12	15	20	25	32	40
H	87	90	99	118	140	155
D1	70	70	80	80	100	100
L	52	60	71	82	90	101

INOXCN
FOCUS ON STAINLESS STEEL

CKECK VALVE

GATE VALVE (QF901)

FEATURES

- ▪200PSI/PN16
- ▪Investment Casting
- ▪PED97/23/EC(CE0035)Approved
- ▪Casting Approved AD2000-WO
- ▪Non-rising stem
- ▪Thread: ASME B 1.20.1 BS21.DIN2999/259 ISO228-1JS B 0203,ISO7/1
- ▪Inspection Testing:API598,EN 12266



MATERIALS LIST

ITEM	DESIGNATION	MATERIAL
1	BODY	CF8/CF8M
2	BONNET	CF8/CF8M
3	STOP RING	304
4	STEM	304
5	PACKING	PTFE
6	HANDWHEEL NUT	304
7	HANDWHEEL	ALUMINUM ALLOY
8	PACKING NUT	304
9	RING	304
10	LOCK NUT	304
11	GASKET	PTFE
12	DISC	CF8/CF8M

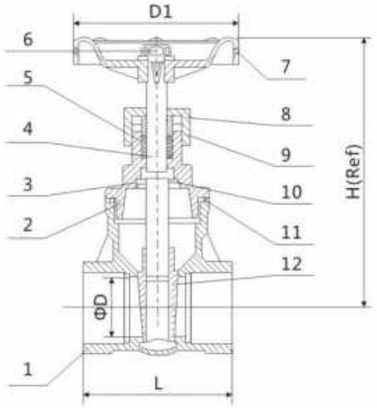

DIMENSIONS(mm)

SIZE / ITEM	1/2'	3/4'	1'	1 1/4'	1 1/2'	2'
D	15	20	25	32	40	50
H	92	99	113	128	147	168
D1	70	70	80	80	100	100
L	55	60	66	76	86	96

CKECK VALVE

SWING CHECK VALVE (QF601)

FEATURES

- 200PSI(PN16)
- Investment Casting
- PED97/23/PE (CE0035) Approved
- Casting Approved AD2000-W0
- Thread: ASME B1.20.1 BS21 .DIN2999/259, ISO228-1, JIS B 0203, IS07/1
- Inspection Testing: DIN3230/3, EN12266



MATERIALS LIST

ITEM	DESIGNATION	MATERIAL
1	BONNET	CF8/CF8M
2	GASKET	PTFE
3	BODY	CF8/CF8M
4	HANGER PIN	304
5	PLUG GASKET	PTFE
6	DISC	CF8/CF8M

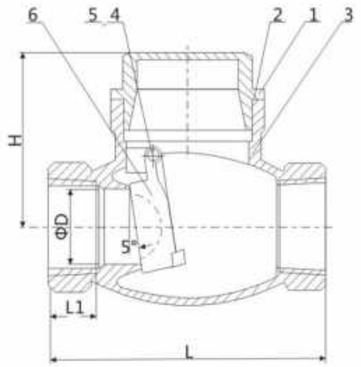

DIMENSIONS(mm)

SIZE / ITEM	1/4'	3/8'	1 /2'	3/4'	1'	1 1/4'	11/2'	2'	2 1/2'	3'
D	6	10	15	20	25	32	38	50	62	75
H	42	42	45	53	60	64	76	82	90	100
L	63	63	65	80	90	104	120	141	163	r 191
LI	10	10	12	15	17	17	20	23	25	28

CKECK VALVE

INOXCN
FOCUS ON STAINLESS STEEL

2PC SPRING CHECK VALVE (QF506)

FEATURES

- 200PSI/PN16
- Investment Casting
- PED97/23/EC (CE0035) Approved
- Casting Approved AD2000/WO
- Thread: ASME B1.20.1 BS21.DIN2999/259 ISO228-1, JS B 0203, ISO7/1
- Inspection Testing: API598,
- EN12266



MATERIALS LIST

ITEM	DESIGNATION	MATERIAL
1	BODY	CF8/CF8M
2	STEM	SUS304/SUS316
3	SPRING	SUS304/SUS316
4	BOLT	304
5	SEAT	NBR/VITON
6	CAP	CF8/CF8M
7	BODY PACKING	PTFE

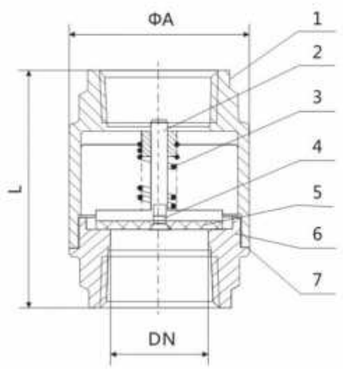

DIMENSIONS(mm)

SIZE / ITEM	1/4"	3/8"	1/2"	3/4"	1"	11/4"	11/2"	2"	21/2"	3"	4"
DN	8	10	15	20	25	30	38	47	61	75	94
ΦA	30.5	30.5	37	42	48	58	70	82	102.5	120	150
L	53	53	56	63	74	81	91	97	118	138	158

CKECK VALVE

3PC SPRING CHECK VALVE(QF507)

FEATURES

- 1000PSI/PN63
- Investment Casting
- Precise Grinding
- PED97/23/EC(CE0035)Approved
- Casting Approved AD2000-WO
- Thread: ASME B 1.20.1
  BS21.DIN2999/259, ISO228-1JISB0203, ISO7/1
- Inspection Testing: API598, EN12266



MATERIALS LIST

ITEM	DESIGNATION	MATERIAL
1	BODY	CF8/CF8M
2	CAP	CF8/CF8M
3	SEAL PACKING	PTFE
4	DISC	SUS304/SUS316
5	SPRING	SUS304/SUS316
6	STOPPER	SUS304/SUS316
7	BOLT	SUS304
8	NUT	SUS304

DIMENSIONS(mm)

ITEM \ SIZE	1/4"	3/8"	1/2"	3/4"	1"	11/4"	11/2"	2"	21/2"	3"	4"
B	8	10	15	20	25	32	40	50	65	80	100
C	56	56	65	70	78	86	102	118	145	158	185
L	61	61	69	74	80	95	101	114	136	146	174

INOXCN
FOCUS ON STAINLESS STEEL

CKECK VALVE

WAFER CHECK VALVE (QF505)

FEATURES

- 200PSI/PN16
- Investment Casting
- Precise Grinding
- PED97/23/EC(CE0035)Approved
- Casting Approved AD2000-WO
- Inspection Testing: API598, EN12266



MATERIALS LIST

ITEM	DESIGNATION	MATERIAL
1	DISC	CF8/CF8M
2	STOPPER	CF8/CF8M
3	BODY	CF8/CF8M
4	SPRING	CF8/CF8M

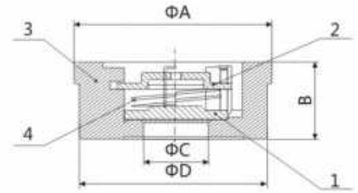

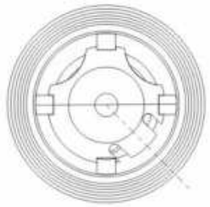

DIMENSIONS(mm)

ITEM \ SIZE	DN15	DN20	DN25	DN32	DN40	DN50	DN65	DN80	DN100	DN120	DN150	DN200
A	39	46	54	70	81	94	113	132	150	187	217	274
L	16	19	22	28	32	40	46	50	60	90	106	140
C	15	20	25	32	40	48	62	75	85	118	140	185
D	34	41	49	62	71	85	102	123	140	177	205	261

BIBCOCK VALVE

BIBCOCK BALL VALVE (QF201W)

FEATURES

- 200PSI/PN16
- Investment Casting
- PED97/23/EC(CE0035)Approved
- Thread: ASME B 1.20.1
  BS21.DIN2999/259
  ISO228-1JIS B 0203, ISO7/1
- Inspection Testing:API598,EN 12266



MATERIALS LIST

ITEM	DESIGNATION	QTY	MATERIAL
1	BODY	1	CF8/CF8M
2	CAP	1	CF8/CF8M
3	BALL	1	304/316
4	BALL SEAT	2	PTFE
5	JOINT GASKET	1	PTFE
6	STEM	1	304
7	STEM PACKING	1	PTFE
8	O-RING	2	NBR
9	HANDLE	1	304
10	SPRING WASHER	1	304
11	NUT	1	304
12	NIPPLE	1	CF8/CF8M
13	HOSE COMMECTION	1	CF8/CF8M
14	GASKETS	1	NBR
15	HANDLE SLEEVE	1	PVC

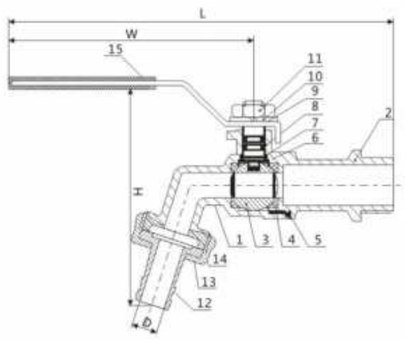

DIMENSIONS(mm)

ITEM \ SIZE	1 /2'	3/4'	1'
D	9	15	20
H	91	102	116
W	92	92	92
L	138	145	158

INOXCN
FOCUS ON STAINLESS STEEL

BIBCOCK VALVE

POLISHED STAINLESS STEEL BENT BALL COCK WITH BOTTLEFILLER (QF202W)

FEATURES

- For Food And General Chemical Service Applications
- Blow-out Proof Stem Design
- Investment Casting
- Standard Compliance
- ASME B 16.34 ANSI B 1.20.1 API 598
- Temperature Range: -20° to 450° F
- End Type: Thread



MATERIALS LIST

ITEM	DESIGNATION	MATERIAL
1	BODY	304/316
2	SLEEVE	304/316
3	BALL	304/316
4	SEAL	PTFE
5	STEM	304/316
6	O-RING	NBR
7	LEVER	304
8	SCREW	304

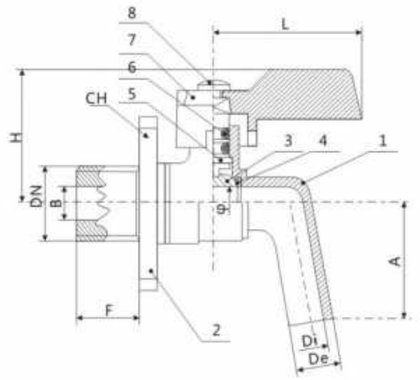

DIMENSIONS(mm)

SIZE	B	F	L	CH	S	Di	De	Φ	A	H
1/2"	13	13	38	29	49	8.5	13	10	29.5	36.5
3/4"	20.5	19	38	36	67	14	17	15	38	41.5
1"	25	20	38	43	68	14	17	15	38	41.5

BARREL NIPPLE (BN)

FEATURES

- The thread ends conform to
  ASME B1.20.1(NPT)
  DIN 2999&BS21
  ISO 228/1& ISO7/1
- Dimension conform to
  ISO 4144,SP114
  EN-10241,JIS
- 150LBS
- Material conform to
  ASTM A351-CF8M/1.4408
  ASTM A351-CF8/1.4401
  ASTM A216-WCB
  AISI 304,304L,316,316L,301,430ETC
- Made from casting,weld pipe or seamless pipe

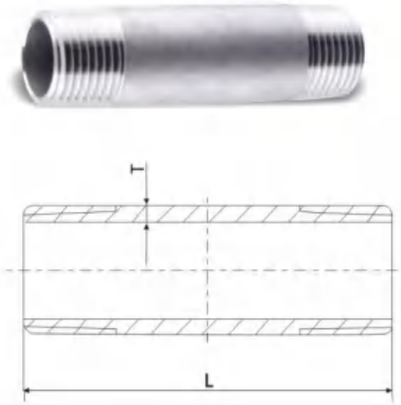

Standard	SIZE	1/8	1/4	3/8	1/2	3/4	1	11/4	11/2	2	2 1/2	3	4
SCH-40	T	2	2.5	2.31	2.77	2.87	3.38	3.56	3.68	3.91	5.16	5.49	6.02
	L(mm)	40	40	40	60	60	60	80	80	100	100	120	150
	L(in)	1"	1"	1"	1"	1"	1"	1"	1"	1"	1"	1"	1"
		11/4"	11/4"	11/4"	11/4"	11/4"	11/4"	11/4"	11/4"	11/4"	11/4"	11/4"	11/4"
		11/2"	11/2"	11/2"	11/2"	11/2"	11/2"	11/2"	11/2"	11/2"	11/2"	11/2"	11/2"
		2"	2"	2"	2"	2"	2"	2"	2"	2"	2"	2"	2"
		21/2"	21/2"	21/2"	21/2"	21/2"	21/2"	21/2"	21/2"	21/2"	21/2"	21/2"	21/2"
		3"	3"	3"	3"	3"	3"	3"	3"	3"	3"	3"	3"
		4"	4"	4"	4"	4"	4"	4"	4"	4"	4"	4"	4"
		5"	5"	5"	5"	5"	5"	5"	5"	5"	5"	5"	5"
		6"	6"	6"	6"	6"	6"	6"	6"	6"	6"	6"	6"
		8"	8"	8"	8"	8"	8"	8"	8"	8"	8"	8"	8"
SCH-80	L(mm)	40	40	40	60	60	60	80	80	100	100	120	150
	T	2.41	3.02	3.2	3.73	3.91	4.55	4.85	5.08	5.54	7.01	7.62	8.56
	L(in)	1"	1"	1"	1"	1"	1"	1"	1"	1"	1"	1"	1"
		11/4"	11/4"	11/4"	11/4"	11/4"	11/4"	11/4"	11/4"	11/4"	11/4"	11/4"	11/4"
		11/2"	11/2"	11/2"	11/2"	11/2"	11/2"	11/2"	11/2"	11/2"	11/2"	11/2"	11/2"
		2"	2"	2"	2"	2"	2"	2"	2"	2"	2"	2"	2"
		21/2"	21/2"	21/2"	21/2"	21/2"	21/2"	21/2"	21/2"	21/2"	21/2"	21/2"	21/2"
		3"	3"	3"	3"	3"	3"	3"	3"	3"	3"	3"	3"
		4"	4"	4"	4"	4"	4"	4"	4"	4"	4"	4"	4"
		5"	5"	5"	5"	5"	5"	5"	5"	5"	5"	5"	5"
		6"	6"	6"	6"	6"	6"	6"	6"	6"	6"	6"	6"
		8"	8"	8"	8"	8"	8"	8"	8"	8"	8"	8"	8"

WELDING NIPPLE (WN)

FEATURES

- The thread ends conform to
  ASME B1.20.KNPT)
  DIN 2999&BS21
  ISO 228/1 & IS07/1
- Dimension conform to
  IS0 4144,SP114
  EN-10241JIS
- 150LBS
- Material conform to
  ASTM A351-CF8M/1.4408
  ASTM A351-CF8/1.4401
  ASTM A216-WCB
  AISI 304,304L,316,316L,301,430ETC
- Made from casting,weld pipe or seamless pipe



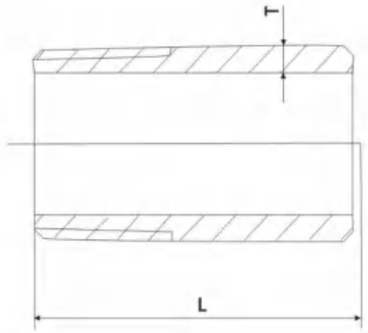

Standard	SIZE	1/8	1/4	3/8	1/2	3/4	1	11/4	11/2	2	2 1/2	3	4
SCH-40	T	2	2.5	2.31	2.77	2.87	3.38	3.56	3.68	3.91	5.16	5.49	6.02
	L(mm)	30	30	30	35	40	40	50	50	50	60	70	80
	L(in)	1"	1"	1"	1"	1"	1"	1"	1"	1"	1"	1"	1"
		11/4"	11/4"	11/4"	11/4"	11/4"	11/4"	11/4"	11/4"	11/4"	11/4"	11/4"	11/4"
		11/2"	11/2"	11/2"	11/2"	11/2"	11/2"	11/2"	11/2"	11/2"	11/2"	11/2"	11/2"
		2"	2"	2"	2"	2"	2"	2"	2"	2"	2"	2"	2"
		21/2"	21/2"	21/2"	21/2"	21/2"	21/2"	21/2"	21/2"	21/2"	21/2"	21/2"	21/2"
		3"	3"	3"	3"	3"	3"	3"	3"	3"	3"	3"	3"
		4"	4"	4"	4"	4"	4"	4"	4"	4"	4"	4"	4"
		5"	5"	5"	5"	5"	5"	5"	5"	5"	5"	5"	5"
		6"	6"	6"	6"	6"	6"	6"	6"	6"	6"	6"	6"
		S"	8"	8"	8"	8"	8"	8"	8"	8"	8"	8"	8"
SCH-80	L(mm)	30	30	30	35	40	40	50	50	50	60	70	80
	T	2.41	3.02	3.2	3.73	3.91	4.55	4.85	5.08	5.54	7.01	7.62	8.56
	L(in)	1"	1"	1"	1"	1"	1"	1"	1"	1"	1"	1"	1"
		11/4"	11/4"	11/4"	11/4"	11/4"	11/4"	11/4"	11/4"	11/4"	11/4"	11/4"	11/4"
		11/2"	11/2"	11/2"	11/2"	11/2"	11/2"	11/2"	11/2"	11/2"	11/2"	11/2"	11/2"
		2"	2"	2"	2"	2"	2"	2"	2"	2"	2"	2"	2"
		21/2"	21/2"	21/2"	21/2"	21/2"	21/2"	21/2"	21/2"	21/2"	21/2"	21/2"	21/2"
		3"	3"	3"	3"	3"	3"	1"	3"	3"	3"	3"	3"
		4"	4"	4"	4"	4"	4"	4"	4"	4"	4"	4"	4"
		5"	5"	5"	5"	5"	5"	5"	5"	5"	5"	5"	5"
		6"	6"	6"	6"	6"	6"	6"	6"	6"	6"	6"	6"
		8"	8"	8"	8"	8"	8"	8"	8"	8"	8"	8"	8"

PIPE FITTING

BW HOSE NIPPLE (BWHON)

FEATURES

- Dimension conform to
  ISO 4144,SP114 EN-10241JIS
- 150LBS
- Material conform to
  ASTM A351-CF8M/1.4408
  ASTM A351-CF8/1.4401
  ASTM A216-WCB
  AISI 304,304L,316,316L,301,430ETC
- Made from casting,weld pipe or seamless pipe



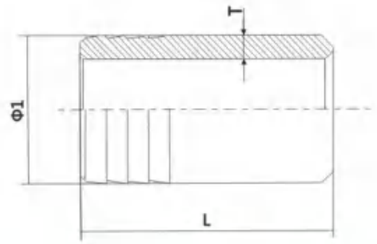

Standard	SIZE	1/8	1/4	3/8	1/2	3/4	1	11/4	11/2	2	2 1/2	3	4
SCH-40	Φ1	9	13	16	20	25.5	32.4	41	47	59	71.5	87.4	112.8
	T	2	2.5	2.31	2.77	2.87	3.38	3.56	3.68	3.91	5.16	5.49	6.02
	L(mm)	36	38	43	48	55	62	62	66	70	75	80	83
	L(in)	1"	1"	1"	1"	1"	1"	1"	1"	1"	1"	1"	1"
		11/4"	11/4"	11/4"	11/4"	11/4"	11/4"	11/4"	11/4"	11/4"	11/4"	11/4"	11/4"
		11/2"	11/2"	11/2"	11/2"	11/2"	11/2"	11/2"	11/2"	11/2"	11/2"	11/2"	11/2"
		2"	2"	2"	2"	2"	2"	2"	2"	2"	2"	2"	2"
		21/2"	21/2"	21/2"	21/2"	21/2"	21/2"	21/2"	21/2"	21/2"	21/2"	21/2"	21/2"
		3"	3"	3"	3"	3"	3"	3"	3"	3"	3"	3"	3"
		4"	4"	4"	4"	4"	4"	4"	4"	4"	4"	4"	4"
		5"	5"	5"	5"	5"	5"	5"	5"	5"	5"	5"	5"
		6"	6"	6"	6"	6"	6"	6"	6"	6"	6"	6"	6"
		8"	8"	8"	8"	8"	8"	8"	8"	8"	8"	8"	8"
SCH-80	Φ1	9	13	16	20	25.5	32.4	41	47	59	71.5	87.4	112.8
	L(mm)	2.41	3.02	3.2	3.73	3.91	4.55	4.85	5.08	5.54	7.01	7.62	8.56
	T	36	38	43	48	55	62	62	66	70	75	80	83
	L(in)	1"	1"	1"	1"	1"	1"	1"	1"	1"	1"	1"	1"
		11/4"	11/4"	11/4"	11/4"	11/4"	11/4"	11/4"	11/4"	11/4"	11/4"	11/4"	11/4"
		11/2"	11/2"	11/2"	11/2"	11/2"	11/2"	11/2"	11/2"	11/2"	11/2"	11/2"	11/2"
		2"	2"	2"	2"	2"	2"	2"	2"	2"	2"	2"	2"
		21/2"	21/2"	21/2"	21/2"	21/2"	21/2"	21/2"	21/2"	21/2"	21/2"	21/2"	21/2"
		3"	3"	3"	3"	3"	3"	3"	3"	3"	3"	3"	3"
		4"	4"	4"	4"	4"	4"	4"	4"	4"	4"	4"	4"
		5"	5"	5"	5"	5"	5"	5"	5"	5"	5"	5"	5"
		6"	6"	6"	6"	6"	6"	6"	6"	6"	6"	6"	6"
		8"	8"	8"	8"	8"	8"	8"	8"	8"	8"	8"	8"

MALE HOSE NIPPLE (MHON)

FEATURES

- The thread ends conform to
  ASME B1.20.KNPT)
  DIN 2999&BS21
  ISO 228/1 & ISO7/1
- Dimension conform to
  ISO 4144/SP114 EN-10241JIS
- 150LBS
- Material conform to
  ASTM A351-CF8M/1.4408
  ASTM A351-CF8/1.4401
  ASTM A216-WCB
  AISI 304,304L/316/316L/301/430ETC
- Made from casting,weld pipe or seamless pipe



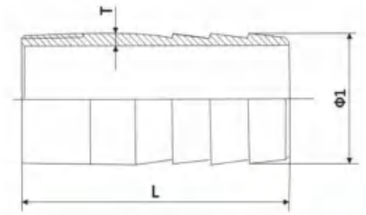

Standard	SIZE	1/8	1/4	3/8	1/2	3/4	1	11/4	11/2	2	21/2	3	4
SCH-40	Φ1	9	13	16	20	25.5	32.4	41	47	59	71.5	87.4	112.8
	T	2	2.5	2.31	2.77	2.87	3.38	3.56	3.68	3.91	5.16	5.49	5.58
	L(mm)	47	49	55	63	72	62	83	87	96	103	111	123
	L(in)	1"	1"	1"	1"	1"	1"	1"	1"	1"	1"	1"	1"
		11/4"	11/4"	11/4"	11/4"	11/4"	11/4"	11/4"	11/4"	11/4"	11/4"	11/4"	11/4"
		11/2"	11/2"	11/2"	11/2"	11/2"	11/2"	11/2"	11/2"	11/2"	11/2"	11/2"	11/2"
		2"	2"	2"	2"	2"	2"	2"	2"	2"	2"	2"	2"
		21/2"	21/2"	21/2"	21/2"	21/2"	21/2"	21/2"	21/2"	21/2"	21/2"	21/2"	21/2"
		3"	3"	3"	3"	3"	3"	3"	3"	3"	3"	3"	3"
		4"	4"	4"	4"	4"	4"	4"	4"	4"	4"	4"	4"
		5"	5"	5"	5"	5"	5"	5"	5"	5"	5"	5"	5"
		6"	6"	6"	6"	6"	6"	6"	6"	6"	6"	6"	6"
		8"	8"	8"	8"	8"	8"	8"	8"	8"	8"	8"	8"
SCH-80	Φ1	9	13	16	20	25.5	32.4	41	47	59	71.5	87.4	112.8
	L(mm)	2.41	3.02	3.2	3.73	3.91	4.55	4.85	5.08	5.54	7.01	7.62	8.56
	T	47	49	55	63	72	62	83	87	96	103	111	123
	L(in)	1"	1"	1"	1"	1"	1"	1"	1"	1"	1"	1"	1"
		11/4"	11/4"	11/4"	11/4"	11/4"	11/4"	11/4"	11/4"	11/4"	11/4"	11/4"	11/4"
		11/2"	11/2"	11/2"	11/2"	11/2"	11/2"	11/2"	11/2"	11/2"	11/2"	11/2"	11/2"
		2"	2"	2"	2"	2"	2"	2"	2"	2"	2"	2"	2"
		21/2"	21/2"	21/2"	21/2"	21/2"	21/2"	21/2"	21/2"	21/2"	21/2"	21/2"	21/2"
		3"	3"	3"	3"	3"	3"	3"	3"	3"	3"	3„	3"
		4"	4"	4"	4"	4"	4"	4"	4"	4"	4"	4"	4"
		5"	5"	5"	5"	5"	5"	5"	5"	5"	5"	5"	5"
		6"	6"	6"	6"	6"	6"	6"	6"	6"	6"	6"	6"
		8"	8"	8"	8"	8"	8"	8"	8"	8"	8"	8"	8"

DOUBLE HOSE NIPPLE (DHON)

FEATURES

- Dimension conform to ISO 4144,SP114 EN-10241JIS
- 150LBS
- Material conform to
  ASTM A351-CF8M/1.4408
  ASTM A351-CF8/1.4401
  ASTM A216-WCB
  AISI 304,304L,316,316L,301,430ETC
- Made from casting,weld pipe or seamless pipe



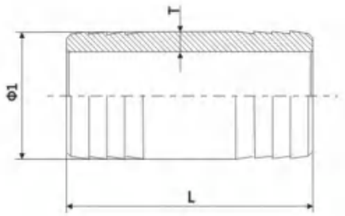

Standard	SIZE	1/8	1/4	3/8	1/2	3/4	1	11/4	11/2	2	2 1/2	3	4
SCH-40	Φ1	9	13	16	20	25.5	32.4	41	47	59	71.5	87.4	112.8
	T	2	2.5	2.31	2.77	2.87	3.38	3.56	3.68	3.91	5.16	5.49	6.02
	L(mm)	62	66	76	86	100	114	114	122	130	140	150	156
	L(in)	1"	1"	1"	1"	1"	1"	1"	1"	1"	1"	1"	1"
		11/4"	11/4"	11/4"	11/4"	11/4"	11/4"	11/4"	11/4"	11/4"	11/4"	11/4"	11/4"
		11/2"	11/2"	11/2"	11/2"	11/2"	11/2"	11/2"	11/2	11/2"	11/2"	11/2"	11/2"
		2"	2"	2"	2"	2"	2"	2"	2"	2"	2"	2"	2"
		21/2"	21/2"	21/2"	21/2"	21/2"	21/2"	21/2"	21/2"	21/2"	21/2"	21/2"	21/2"
		3"	3"	3"	3"	3"	3"	3"	3"	3"	3"	3"	3"
		4"	4"	4"	4"	4"	4"	4"	4"	4"	4"	4"	4"
		5"	5"	5"	5"	5"	5"	5"	5"	5"	5"	5"	5"
		6"	6"	6"	6"	6"	6"	6"	6"	6"	6"	6"	6"
		8"	8"	8"	8"	8"	8"	8"	8"	8"	8"	8"	8"
SCH-80	Φ1	9	13	16	20	25.5	32.4	41	47	59	71.5	87.4	112.8
	L(mm)	2.41	3.02	3.2	3.73	3.91	4.55	4.85	5.08	5.54	7.01	7.62	8.56
	T	62	66	76	86	100	114	114	122	130	140	150	156
	L(in)	1"	1"	1"	1"	1"	1"	1"	1"	1"	1"	1"	1"
		11/4"	11/4"	11/4"	11/4"	11/4"	11/4"	11/4"	11/4"	11/4"	11/4"	11/4"	11/4"
		11/2"	11/2"	11/2"	11/2"	11/2"	11/2"	11/2"	11/2"	11/2"	11/2"	11/2"	11/2"
		2"	2"	2"	2"	2"	2"	2"	2"	2"	2"	2"	2"
		21/2"	21/2"	21/2"	21/2"	21/2"	21/2"	21/2"	21/2"	21/2"	21/2"	21/2"	21/2"
		3"	3"	3"	3"	3"	3"	3"	3"	3"	3"	3"	3"
		4"	4"	4"	4"	4"	4"	4"	4"	4"	4"	4"	4"
		5"	5"	5"	5"	5"	5"	5"	5"	5"	5"	5"	5"
		6"	6"	6"	6"	6"	6"	6"	6"	6"	6"	6"	6"
		8"	8"	8"	8"	8"	8"	8"	8"	8"	8"	8"	8"

PARREL NIPPLE (PN)

FEATURES

- The thread ends conform to ASME B 1.20.1 (NPT)
- DIN 2999&BS21 ISO 228/1 & IS07/1
- Dimension conform to ISO 4144,SP114 EN-10241JIS
- 150LBS
- Material conform to
  ASTM A351-CF8M/1.4408
  ASTM A351-CF8/1.4401
  ASTM A216-WCB
  AISI 304,304L,316,316L,301,430ETC
- Made from casting,weld pipe or seamless pipe



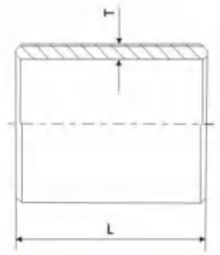

Standard	SIZE	1/8	1/4	3/8	1/2	3/4	1	11/4	11/2	2	2 1/2	3	4
SCH-40	T	2	2.5	2.31	2.77	2.87	3.38	3.56	3.68	3.91	5.16	5.49	6.02
	L(mm)	22	22	24	30	34	40	42	42	52	56	62	80
	L(in)	1"	1"	1"	1"	1"	1"	1"	1"	1"	1"	1"	1"
		11/4"	11/4"	11/4"	11/4"	11/4"	11/4"	11/4"	11/4"	11/4"	11/4"	11/4"	11/4"
		11/2"	11/2"	11/2"	11/2"	11/2"	11/2"	11/2"	11/2"	11/2"	11/2"	11/2"	11/2"
		2"	2"	2"	2"	2"	2"	2"	2"	2"	2"	2"	2"
		21/2"	21/2"	21/2"	21/2"	21/2"	21/2"	21/2"	21/2"	21/2"	21/2"	21/2"	21/2"
		3"	3"	3"	3"	3"	3"	3"	3"	3"	3"	3"	3"
		4"	4"	4"	4"	4"	4"	4"	4"	4"	4"	4"	4"
		5"	5"	5"	5"	5"	5"	5"	5"	5"	5"	5"	5"
		6"	6"	6"	6"	6"	6"	6"	6"	6"	6"	6"	6"
		8"	8"	8"	8"	8"	8"	8"	8"	8"	8"	8"	8"
SCH-80	L(mm)	22	22	24	30	34	40	42	42	52	56	62	80
	T	2.41	3.02	3.2	3.73	3.91	4.55	4.85	5.08	5.54	7.01	7.62	8.56
	L(in)	1"	1"	1"	1"	1"	1"	1"	1"	1"	1"	1"	1"
		11/4"	11/4"	11/4"	11/4"	11/4"	11/4"	11/4"	11/4"	11/4"	11/4"	11/4"	11/4"
		11/2"	11/2"	11/2"	11/2"	11/2"	11/2"	11/2"	11/2"	11/2"	11/2"	11/2"	11/2"
		2"	2"	2"	2"	2"	2"	2"	2"	2"	2"	2"	2"
		21/2"	21/2"	21/2"	21/2"	21/2"	21/2"	21/2"	21/2"	21/2"	21/2"	21/2"	21/2"
		3"	3"	3"	3"	3"	3"	3"	3"	3"	3"	3"	3"
		4"	4"	4"	4"	4"	4"	4"	4"	4"	4"	4"	4"
		5"	5"	5"	5"	5"	5"	5"	5"	5"	5"	5"	5"
		6"	6"	6"	6"	6"	6"	6"	6"	6"	6"	6"	6"
		8"	8"	8"	8"	8"	8"	8"	8"	8"	8"	8"	8"

ELBOW 90° (LB 90°)

FEATURES

- The thread ends conform to ASME B1.20.1(NPT) DIN 2999&BS21 ISO 228/1 & ISO7/1
- Dimension conform to ISO 4144,SP114 EN-10241JIS
- 150LBS
- Material conform to ASTM A351-CF8M/1.4408 ASTM A351-CF8/1.4401 ASTM A216-WCB AISI 304,304L,316,316L,301,430ETC



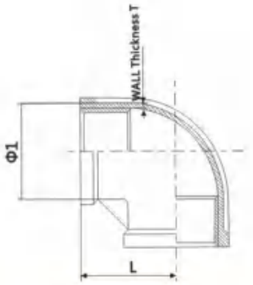

Standard	SIZE	1/8	1/4	3/8	1/2	3/4	1	11/4	11/2	2	2 1/2	3	4
ISO4144	Φ1	13	16	20	24.5	30	37.5	46.5	53	65.5	82	95.5	121.5
	L	17	19	23	27	32	38	45	48	57	69	78	96
	T	2.5	2.5	2.8	1.65	1.75	2	2.25	2.5	2.85	3.25	3.75	4.25
JIS	Φ1	16	19	22	26	32	39	48	55	67	83.5	97	123
	L	17	19	23	27	32	38	46	48	57	69	78	96
	T	2.5	2.5	2.5	2.5	3	3	3.5	3.5	4	4.5	5	5.5
SP-114	Φ1	13.5	15.4	19.7	26.2	31.9	39.8	47.8	55.9	66.5	83.B	98.2	123
	L	20.6	20.6	23.6	28.5	33.3	38.1	44.5	49	57.1	68	77.6	96.8
	T	2.7	2.7	2.7	2.7	3.2	3.2	3.8	3.8	4	4.7	5.2	6
EN-10241	Φ1	15.2	19.7	23.3	28	34.8	43.6	53	58	71	87	100	126
	L	17	18.5	22.9	26.8	32	37.5	45.9	47.6	58	70	77	97
	T	3.6	4.35	4.85	3.4	4.15	5.05	5.5	5	5.6	5.75	6	6.5

STREET ELBOW 90°(SLB 90°)

FEATURES

- The thread ends conform to ASME B1.20.1(NPT) DIN 2999&BS21 ISO 228/1 & ISO7/1
- Dimension conform to IS0 4144,SP114 EN-10241JIS
- 150LBS
- Material conform to ASTM A351-CF8M/1.4408 ASTM A351-CF8/1.4401 ASTM A216-WCB AISI 304,304L,316,316L,301,430ETC



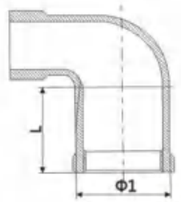

Standard	SIZE	1/8	1/4	3/8	1/2	3/4	1	11/4	11/2	2	2 1/2	3	4
ISO4144	Φ1	13	16	20	24.5	30	37.5	46.5	53	65.5	82	95.5	121.5
	L	17	19	23	27	32	38	45	48	57	69	78	97
JIS	Φ1	16	19	22	26	32	39	48	55	67	83.5	97	123
	L	17	19	23	27	32	38	46	48	57	69	78	96
SP-114	Φ1	13.5	15.4	19.7	26.2	31.9	39.8	47.8	55.9	66.5	83.3	98.2	123
	L	20.6	20.6	23.6	28.5	33.3	38.1	44.5	49	57.1	68	77.6	96.8
EN-10241	Φ1	17	21	25	29	35	43	52	58.8	71.7	86.2	98.6	121
	L	19	21	25	28	33	38	45	50	58	69	78	97

ELBOW 45° (LB 45°)

FEATURES

- The thread ends conform to ASME B1.20.1(NPT) DIN 2999&BS21; ISO 228/1 & IS07/1
- Dimension conform to ISO 4144,SP114 EN-10241JIS
- 150LBS
- Material conform to ASTM A351-CF8M/1.4408 ASTM A351-CF8/1.4401 ASTM A216-WCB AISI 304,304L,316,316L,301,430ETC



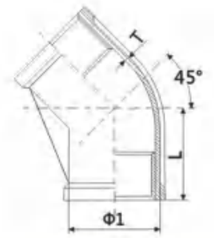

Standard	SIZE	1/8	1/4	3/8	1/2	3/4	1	11/4	11/2	2	2 1/2	3	4
ISO4144	Φ1	13	16	20	24.5	30	37.5	46.5	53	65.5	82	95.5	121.5
	L	16	17	19	21	25	29	33	37	42	49	54	64
	T	2.5	2.5	2.8	1.65	1.75	2.0	2.25	2.5	2.85	3.25	3.75	4.25
JIS	Φ1	16	19	22	26	32	39	48	55	67	83.5	97	123
	L	17	19	23	27	32	38	46	48	57	69	78	96
	T	2.5	2.5	2.5	2.5	3.0	3.0	3.5	3.5	4.0	4.5	5.0	5.5
SP-114	Φ1	13.5	15.4	19.7	26.2	31.9	39.8	47.8	55.9	66.5	83.3	98.2	123
	L	19	21	23	25	30	32	33	36	44	50	54	58.5
	T	2.7	2.7	2.7	2.7	3.2	3.2	3.8	3.8	4.0	4.7	5.2	6.0
EN-10241	Φ1	18	21	25	29.5	35.6	43	52.4	58	72	87	100.3	125.5
	L	18	18	20	22	25	28	33	36	43	50	55	64
	T	5.0	5.0	5.3	4.15	4.55	4.75	5.2	5.0	6.1	5.75	6.15	6.25

STREET ELBOW 45°(SLB 45°)

FEATURES

- The thread ends conform to ASME B1.20.KNPT) DIN 2999&BS21 ISO 228/1 & ISO7/1
- Dimension conform to ISO 4144,SP114 EN-10241JIS
- 150LBS
- Material conform to ASTM A351-CF8M/1.4408 ASTM A351-CF8/1.4401 ASTM A216-WCB AISI 304,304L,316,316L,301,430ETC



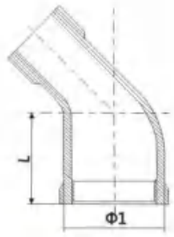

Standard	SIZE	1/8	1/4	3/8	1/2	3/4	1	11/4	11/2	2	2 1/2	3	4
ISO4144	Φ1	13	16	20	24.5	30	37.5	46.5	53	65.5	82	95.5	121.5
	L	17	19	23	27	32	38	45	48	57	69	78	97
JIS	Φ1	16	19	22	26	32	39	48	55	67	83.5	97	123
	L	17	19	23	27	32	38	46	48	57	69	78	96
SP-114	Φ1	13.5	15.4	19.7	26.2	31.9	39.8	47.8	55.9	66.5	83.3	98.2	123
	L	20.6	20.6	23.6	28.5	33.3	38.1	44.5	49	57.1	68	77.6	96.8
EN-10241	Φ1	17	21	25	29	35	43	52	58.8	71.7	86.2	98.6	121
	L	19	21	25	28	33	38	45	50	58	69	78	97

TEE(BT)

FEATURES

- The thread ends conform to
  ASMEB1.20.KNPT)
  DIN2999&BS21 ISO 228/1 & IS07/1
- Dimension conform to
  ISO 4144,SP114 EN-10241JIS
- 150LBS
- Material conform to
  ASTM A351-CF8M/1.4408
  ASTM A351-CF8/1.4401 ASTMA216-WCB
  AISI 304,3041,316,316L,301,430ETC



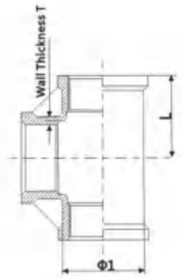

Standard	SIZE	1/8	1/4	3/8	1/2	3/4	1	11/4	11/2	2	2 1/2	3	4
ISO4144	Φ1	13	16.5	20	24.5	30	37.5	46.5	53	65.5	82	95.5	121.5
	L	17	19	23	27	32	38	45	48	57	69	78	96
	T	2.5	2.5	2.8	1.65	1.75	2	2.25	2.5	2.85	3.25	3.75	4.25
JIS	Φ1	16	19	22	26	32	39	48	55	67	83.5	97	123
	L	17	19	23	27	32	38	46	48	57	69	78	96
	T	2.5	2.5	2.5	2.5	3	3	3.5	3.5	4	4.5	5	5.5
SP-114	Φ1	13.5	15.4	19.7	26.2	31.9	39.8	47.8	55.9	66.5	83.3	98.2	123
	L	20.6	20.6	23.6	28.5	33.3	38.1	44.5	49	57.1	68	77.6	96.8
	T	2.7	2.7	2.7	2.7	3.2	3.2	3.8	3.8	4	4.7	5.2	6
EN-10241	Φ1	17	21.3	23.5	30	35	43	52	58	71	86.6	100.2	125
	L	19	21	23.6	28	33	38	45	50	58	70	78.5	97
	T	3.6	4.35	4.85	3.4	4.15	5.05	5.5	5	5.6	5.75	6	6.5

CROSS (+B)

FEATURES

- The thread ends conform to
  ASME B 1.20.1 (NPT)
  DIN2999&BS21 ISO 228/1 & ISO7/1
- Dimension conform to
  ISO 4144,SP114 I EN-10241JIS
- 150LBS
- Material conform to
  ASTM A351-CF8M/1.4408
  ASTM A351-CF8/1.4401 ASTMA216-WCB
  AISI 304,304L,316,316L,301,430ETC



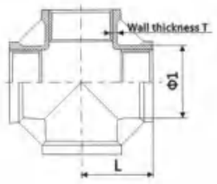

Standard	SIZE	1/8	1/4	3/8	1/2	3/4	1	11/4	11/2	2	2 1/2	3	4
ISO4144	Φ1	13	16	20	24.5	30	37.5	46.5	53	65.5	82	95.5	121.5
	L	17	19	23	27	32	38	45	48	57	69	78	96
	T	2.5	2.5	2.8	1.65	1.75	2	2.25	2.5	2.85	3.25	3.75	4.25
JIS	Φ1	16	19	22	26	32	39	48	55	67	83.5	97	123
	L	17	19	23	27	32	38	46	48	57	69	78	96
	T	2.5	2.5	2.5	2.5	3	3	3.5	3.5	4	4.5	5	5.5
SP-114	Φ1	13.5	15.4	19.7	26.2	31.9	39.8	47.8	55.9	66.5	83.3	98.2	123
	L	20.6	20.6	23.6	28.5	33.3	38.1	44.5	49	57.1	68	77.6	96.8
	T	2.7	2.7	2.7	2.7	3.2	3.2	3.8	3.8	4	4.7	5.2	6
EN-10241	Φ1	15.2	19.7	23.3	28	34.8	43.6	53	58	71	86.6	100	126
	L	17	18.5	22.9	26.8	32	37.5	45.9	47.6	58	70	77	97
	T	3.6	4.35	4.85	3.4	4.15	5.05	5.5	5	5.6	5.75	6	6.5

RED ELBOW 90° (RLB)

FEATURES

- The thread ends conform to
  ASME B1.20.1(NPT)
  DIN 2999&BS21 ISO 228/1 & ISO7/1
- Dimension conform to
  ISO 4144,SP114 EN-10241JIS
- 150LBS
- Material conform to
  ASTM A351-CF8M/1.4408
  ASTM A351-CF8/1.4401
  ASTM A216-WCB
  AISI 304,304L,316,316L,301,430ETC



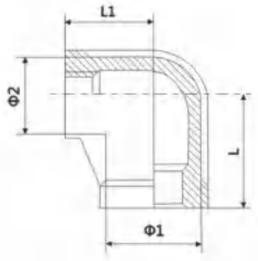

Standard	SIZE	1/4 1/8	3/8 1/4	1/2 1/4	1/2 3/8	3/4 3/8	3/4 1/2	1 1/2	1 3/4	11/4 3/4	11/4 1
IS04144	Φ1	16	20	24.5	24.5	30	30	37.5	37.5	46.5	46.5
	Φ2	13	16	16	20	20	24.5	24.5	30	30	37.5
	L	18	22	24	25	28	30	33	35	40	42
	L1	18	20	24	26	28	29	32	34	38	40
JIS	Φ1	19	22	26	26	32	32	39	39	48	48
	Φ2	16	19	19	22	22	26	26	32	32	39
	L	19	23	27	27	32	32	38	38	46	46
	L1	17	19	19	23	23	27	27	32	32	38
SP-114	Φ1	15.4	19.7	26.2	26.2	31.9	31.9	39.8	39.8	47.8	47.8
	Φ2	13.5	15.4	15.4	19.7	19.7	26.2	26.2	31.9	31.9	39.8
	L	22	24	21	26	26.5	26.5	32.5	34	38	40
	L1	20	24	22	25	28	28	34	35	40	40
EN-10241	Φ1	21.3	23.5	29	29	35	35	43	43	52	52
	Φ2	17	21.3	21.3	23.5	23.5	29	29	35	35	43
	L	21	21.3	27	27	33	33	38	38	45	45
	L1	19	21	21	21.3	21.3	27	27	33	33	38

Standard	SIZE	11/2 1	11/2 11/4	2 11/4	2 11/2	21/2 11/2	21/2 2	3 2	3 21/2	4 21/2	4 3
IS04144	Φ1	53	53	65.5	65.5	82	82	95.5	95.5	121.5	121.5
	Φ2	37.5	46.5	46.5	53	53	65.5	65.5	82	82	95.5
	L	45	48	54	55	62	65	72	75	90	91
	L1	41	45	48	52	55	60	62	72	78	83
JIS	Φ1	55	55	67	67	83.5	83.5	97	97	123	123
	Φ2	39	48	48	55	55	67	67	83.5	83.5	97
	L	48	48	57	57	69	69	78	78	96	96
	L1	38	46	46	48	48	57	57	69	69	78
SP-114	Φ1	55.9	55.9	66.5	66.5	83.3	83.3	98.2	98.2	123	123
	Φ2	39.8	47.8	47.8	55.9	55.9	66.5	66.5	83.3	83.3	98.2
	L	42	43	45	52	54	62	63	70	72	79
	L1	45	47	52	55	60	63	68	71	76	80
EN-10241	Φ1	58	58	71	71	86.5	86.5	99.5	99.5	125	125
	Φ2	43	52	52	58	58	71	71	86.5	86.5	99.5
	L	50	50	58	58	69.7	69.7	77.5	77.5	98.2	98.2
	L1	38	45	45	50	50	58	58	69.7	69.7	77.5

RED TEE (RTB)

FEATURES

- The thread ends conform to
  ASME B1.20.1(NPT)
  DIN 2999&BS21 ISO 228/1 & ISO7/1
- Dimension conform to
  ISO 4144,SP114 EN-10241JIS
- 150LBS
- Material conform to
  ASTM A351-CF8M/1.4408
  ASTM A351-CF8/1.4401 ASTM A216-WCB
  AISI 304,304L,316,316L,301,430ETC



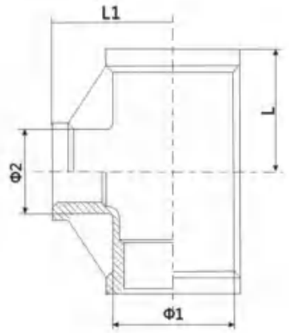

Standard	SIZE	1/4	3/8	1/2		3/4		1		11/4	
		1/8	1/4	1/4	3/8	3/8	½	½	3/4	3/4	1
IS04144	Φ1	16	20	24.5	24.5	30	30	37.5	37.5	46.5	46.5
	Φ2	13	16	16	20	20	24.5	24.5	30	30	37.5
	L	18	22	24	25	28	30	33	35	40	42
	L1	18	20	24	26	28	29	32	34	38	40
JIS	Φ1	19	22	26	26	32	32	39	39	48	48
	Φ2	16	19	19	22	22	26	26	32	32	39
	L	19	23	27	27	32	32	38	38	46	46
	L1	17	19	19	23	23	27	27	32	32	38
SP-114	Φ1	15.4	19.7	26.2	26.2	31.9	31.9	39.8	39.8	47.8	47.8
	Φ2	13.5	15.4	15.4	19.7	19.7	26.2	26.2	31.9	31.9	39.8
	L	20.6	23.6	28.5	28.5	33.3	33.3	38.1	38.1	44.5	44.5
	L1	20.6	20.6	20.6	23.6	23.6	28.5	28.5	33.3	33.3	38.1
EN-10241	Φ1	21.3	23.5	30	30	35	35	43	43	52	52
	Φ2	17	21.3	21.3	23.5	23.5	30	30	35	35	43
	L	21	23.6	28	28	33	33	38	38	45	45
	L1	19	21	21	23.6	23.6	28	28	33	33	38

Standard	SIZE	11/2		2		21/2		3		4	
		1	11/4	11/4	11/2	11/2	2	2	21/2	21/2	3
IS04144	Φ1	53	53	65.5	65.5	82	82	95.5	95.5	121.5	121.5
	Φ2	37.5	46.5	46.5	53	53	65.5	65.5	82	82	95.5
	L	45	48	54	55	62	65	72	75	90	91
	L1	41	45	48	52	55	60	62	72	78	83
JIS	Φ1	55	55	67	67	83.5	83.5	98.2	98.2	123	123
	Φ2	39	48	48	55	55	67	67	83.5	83.5	98.2
	L	48	48	57	57	69	69	78	78	96	96
	L1	38	46	46	48	48	57	57	69	69	78
SP-114	Φ1	55.9	55.9	66.5	66.5	83.3	83.3	98.2	98.2	123	123
	Φ2	39.8	47.8	47.8	55.9	55.9	66.5	66.5	83.3	83.3	98.2
	L	49	49	57.1	57.1	68	68	77.6	77.6	96.8	96.8
	L1	38.1	44.5	44.5	49	49	57.1	57.1	68	68	77.6
EN-10241	Φ1	58	58	71	71	86.6	86.6	100.2	100.2	125	125
	Φ2	43	52	52	58	58	71	71	86.6	86.6	100.2
	L	50	50	58	58	70	70	78.5	78.5	97	97
	L1	38	45	45	50	50	58	58	70	70	78.5

HEX.NIPPLE (HN)

FEATURES

- The thread ends conform to
  ASME B1.20.KNPT)
  DIN 2999&BS21 ISO 228/1 & ISO7/1
- Dimension conform to
  ISO 4144,SP114 EN-10241JIS
- 150LBS
- Material conform to
  ASTM A351-CF8M/1.4408
  ASTM A351-CF8/1.4401 ASTM A216-WCB
  AISI 304,304L,316,316L,301,430ETC



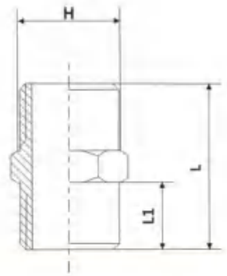

Standard	SIZE	1/8	1/4	3/8	½	3/4	1	11/4	11/2	2	2 1/2	3	4
ISO4144	Φ1	20	25	27	34	36.5	42	47.5	17.5	57	61	67.5	80
	L	8	10.5	11	14.5	15.5	18	20.5	20.5	25	27	30	36
	T	11	15	18	22	28	35	43.5	49.5	62	77.5	90.5	117
JIS	Φ1	32	34	36	42	47	52	56	60	66	73	82	93
	L	11	12	13	16	18	20	22	23	26	28	33	36
	T	14	17	21	26	31	38	46	53	63	81	94	118
SP-114	Φ1	33	30	31.8	38	43.8	49.7	54	59.9	65.5	72.9	80	91
	L	12.9	12	12.8	15	17	19.6	20.7	22.8	25.6	27.8	31	35.7
	T	12.5	17	20.9	26	31	38	45	52	62.7	80	92	117.5
EN-10241	Φ1	23.6	27.8	28	34	40	46	52.5	54	62	70	78.4	94
	L	8.9	11	12.2	14.9	16.5	19.5	21.5	22.2	24.4	28.5	31.7	38.2
	T	12	16	19	21.6	30	36	46	50	64.5	79.5	90	120

SOCKET BANDED (SB)

FEATURES

- The thread ends conform to
  ASME B1.20.KNPT)
  DIN 2999&BS21 ISO 228/1 & ISO7/1
- Dimension conform to
  ISO 4144,SP114 EN-10241JIS
- 150LBS
- Material conform to
  ASTM A351-CF8M/1.4408
  ASTM A351-CF8/1.4401 ASTM A216-WCB
  AISI 304,304L,316,316L,301,430ETC



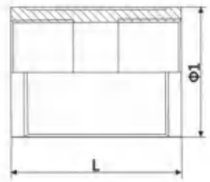

Standard	SIZE	1/8	1/4	3/8	1/2	3/4	1	11/4	11/2	2	2 1/2	3	4
ISO4144	Φ1	13	16	20	24.5	30	37.5	46.5	53	65.5	82	95.5	121.5
	L	17	24	25	32	35	41	45	48	54	63	69	81
JIS	Φ1	16	19	22	26	32	39	48	55	67	83.5	97	123
	L	17	19	23	27	32	38	46	48	57	69	78	96
SP-114	Φ1	15	21.3	25.7	27	31.9	39.8	47.8	55.9	66.5	83.3	98.2	123
	L	20	25.6	27	34	36	44	52	51	56	69	76.5	80
EN-10241	Φ1	15	18.5	21.3	26.4	31.8	39.5	49.3	55.5	69	87	103	126
	L	15	25	26	34	36	43	48	48	56	65	71	83

HEX.BUSHING (HB)

FEATURES

- ■The thread ends conform to
  ASME B1.20.KNPT)
  DIN 2999&BS21 ISO 228/1 & ISO7/1
- ■Dimension conform to
  ISO 4144/SP114 EN-10241JIS
- ■150LBS
- ■Material conform to
  ASTM A351-CF8M/1.4408
  ASTM A351-CF8/1.4401 ASTM A216-WCB
  AISI 304,304L,316,316L,301,430ETC

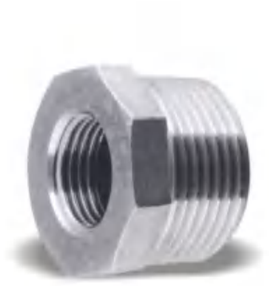

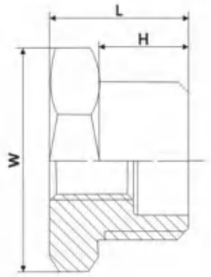

Standard	SIZE	1/4	3/8	1/2		3/4		1		11/4	
		1/8	1/4	1/4	3/8	3/8	1/2	1/2	3/4	3/4	1
IS04144	H	11.5	12	14.5	14.5	15.5	15.5	17.5	17.5	20	20
	L	16	16.5	20	20	21	21	24	24	27	27
	W	14	18	22	22	27.5	27.5	34.5	34.5	43	43
JIS	H	12	13	16	16	18	18	20	20	22	22
	L	17	18	21	21	24	24	27	27	30	30
	w	17	21	26	26	31	31	38	38	46	46
SP-114	H	11.7	13	15	15	18	18	19.6	19.6	22.5	22.5
	L	18	19	21	21	26	26	27.6	27.6	32	32
	W	16.7	21	25	25	29	29	37	37	48	48
EN-10241	H	10.8	11.9	15.6	15.4	17.4	17.5	19.7	19.7	21.9	21.9
	L	15.2	16.5	21	21	24	24	27	27	30	30
	w	16	18	26	26	30	30	35	35	45	45

Standard	SIZE	11/2		2		21/2		3		4	
		1	11/4	11/4	11/2	11/2	2	2	21/2	21/2	3
IS04144	H	20.5	20.5	24	24	27	27	30	30	35	35
	L	28.5	28.5	32	32	37	37	40	40	45	45
	W	49	49	61	61	76	76	90	90	115	115
JIS	H	23	23	25	25	28	28	31	31	37	37
	L	32	32	36	36	39	39	44	44	51	51
	w	53	53	63	63	80	80	90	90	119	119
SP-114	H	22	22	25.5	25.5	32	32	34.5	34.5	38	38
	L	32	32	37.6	37.6	44	44	46	46	52	52
	W	53	53	63	63	80	80	92	92	116	116
EN-10241	H	25.8	25.8	24.8	24.8	30.9	30.9	33	33	35	35
	L	38	38	36	36	45	45	47	47	52	52
	w	52	52	63	63	81	81	95	95	110	110

HEX.HOSE NIPPLE (HON)

FEATURES

- ■The thread ends conform to
  ASME B1.20.KNPT)
  DIN 2999&BS21 ISO 228/1 & ISO7/1
- ■Dimension conform to
  ISO 4144,SP114 EN-10241JIS
- ■150LBS
- ■Material conform to
  ASTM A351-CF8M/1.4408
  ASTM A351-CF8/1.4401
  ASTM A216-WCB
  AISI 304,304L,316,316L,301,430ETC
- ■Made from casting or bar



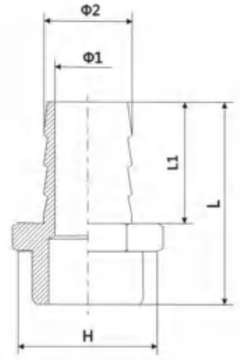

Standard	SIZE	1/8	1/4	3/8	1/2	3/4	1	11/4	11/2	2	2 1/2	3	4
IS04144	L	38	42.5	49	57.5	66	76	79	83	92	99	107.5	117
	L1	26	28	33	38	45	52	52	56	60	65	70	73
	Φ1	4	5	7	10.5	15	22	27.5	34	45	59	71	95
	Φ2	8	9	11.5	15	20	27	33	39.5	52	67	80	105
	H	11	15	18	22	28	35	43.5	49.5	62	77.5	90.5	117
JIS	L	33	41	44	49	59	69	74	79	89	109	134	149
	L1	19	23	24	25	34	44	44	45	54	61	91	96
	Φ1	5	6	8	11.5	16.5	23	28	35	47	61	73	96
	Φ2	9	11	12	16	22	29.5	36	42	54	65.5	78.5	103
	H	11	13	16	19.5	24.5	33.5	43.5	51.5	62.5	78.5	92.5	117.5
SP-114	L	34	42	45	50	60	70	75	80	90	110	135	150
	L1	20	24	25	26	35	45	45	46	55	67	92	96
	Φ1	4	5	6	9	15	21.5	27	33	45	55	68	91
	Φ2	7	9	10	14	20	27.5	34	40	52	63.5	76.5	103
	H	14	16	19	22	27.5	36.6	46	52	63	79	93	118
EN-10241	L	45	47	55	64	68	71	80	95	105	125	150	165
	L1	31.6	31.8	38.5	43	44	44	50	57	67	80	103	113
	Φ1	2.5	4.4	7.5	10.7	17.1	23.4	28.8	35.1	47.5	58.5	68.2	87.6
	Φ2	4.5	6.4	9.5	12.7	19.1	25.4	31.8	38.1	50.8	63.5	76.2	105
	H	12.5	16.5	20	23.5	31	38.5	46	52	62	78	92	117

HEX.PLUG(HP)

FEATURES

- The thread ends conform to ASME B1.20.KNPT) DIN 2999&BS21 ISO 228/1 & ISO7/1
- Dimension conform to ISO 4144,SP114 EN-10241JIS
- 150LBS
- Material conform to ASTM A351-CF8M/1.4408 ASTM A351-CF8/1.4401 ASTM A216-WCB AISI 304,304L,316,316L,301,430ETC



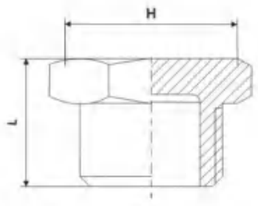

Standard	SIZE	1/8	1/4	3/8	1/2	3/4	1	11/4	11/2	2	21/2	3	4
ISO4144	H	11	15	18	22	28	35	43.5	49.5	62	77.5	90.5	117
	L	12	14.5	16	19.5	21	24	27	27	32	34	37.5	44
JIS	H	13.8	16.7	21	25	29	37	48	53	63	80	92	116
	L	16.8	18	19	21	26	27.6	32	32	37.6	44	46	52
SP-114	H	13.6	16.6	20.6	25.8	30.5	37.5	45.4	52.1	62.5	79.2	92.2	117.2
	L	16.9	18	18.9	22	25	27	30	31.8	35.7	38.9	43.9	50.6
EN-10241	H	14	16	18	26	30	35	45	52	63	81	95	118
	L	13.4	15.2	16.5	21	24	27	30	38	36	45	47	52

HEX.CAP (HCB)

FEATURES

- The thread ends conform to ASME B1.20.KNPT) DIN 2999&BS21 ISO 228/1 & ISO7/1
- Dimension conform to ISO 4144,SP114 EN-10241JIS
- 150LBS
- Material conform to ASTM A351-CF8M/1.4408 ASTM A351-CF8/1.4401 ASTM A216-WCB



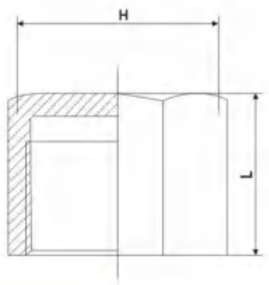

Standard	SIZE	1/8	1/4	3/8	1/2	3/4	1	11/4	11/2	2	21/2	3	4
ISO4144	H	13.5	17	20.5	25	31	38	47	53	66	82	95.5	121.5
	L	13.5	17	17.5	21	22.5	26	29	29	33.5	38.5	42	48.5
JIS	H	14	17	20	20	30	36	45	52	63	76	89	121
	L	14	15	17	24	24	28	30	32	36	40	45	54
SP-114	H	18.5	15.4	19.7	26.2	31.9	39.8	47.8	55.9	66.5	83.3	98.2	123
	L	15.4	15.5	18	23.5	24.6	29.9	30.6	32.5	35.6	42.7	44.7	48
EN-10241	H	15	18	21	27	30	38	50	55	70	92	109	132
	L	13	17	19	20	24	25	28	28	34	40	45	50

RED.HEX.NIPPLE (RHN)

FEATURES

- The thread ends conform to ASME B1.20.KNPT) DIN 2999&BS21 ISO 228/1 & ISO7/1
- Dimension conform to ISO 4144,SP114 EN-10241JIS
- 150LBS
- Material conform to ASTM A351-CF8M/1.4408 ASTM A351-CF8/1.4401 ASTM A216-WCB AISI 304,304L,316,316L,301,430ETC



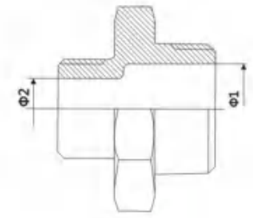

Standard	SIZE	1/4	3/8	1/2		3/4		1		11/4	
		1/8	1/4	1/4	3/8	3/8	1/2	1/2	3/4	3/4	1
ISO4144	Φ1	8	11.5	15	15	20.5	20.5	26	26	34.5	34.5
	Φ2	5.5	8	8	11.5	11.5	15	15	20.5	20.5	26
JIS	Φ1	8.5	11	16	16	19	19	26	26	3B.5	33.5
	Φ2	5	8.5	8.5	11	11	16	16	19	19	26
EN-10241	Φ1	7	9.4	13.7	13.7	19	19	25.5	25.5	32	32
	Φ2	4.3	7	7	9.4	9.4	13.7	13.7	19	19	25.5

Standard	SIZE	11/2		2		21/2		3		4	
		1	11/4	11/4	11/2	11/2	2	2	21/2	21/2	3
ISO4144	Φ1	40	40	51	51	65.5	65.5	77.5	77.5	101.5	101.5
	Φ2	26	34.5	34.5	40	40	51	51	65.5	65.5	77.5
JIS	Φ1	39	39	50	50	64.5	64.5	75.5	75.5	100.5	100.5
	Φ2	26	33.5	33.5	39	39	50	50	64.5	64.5	75.5
EN-10241	Φ1	38.5	38.5	50.2	50.2	63.8	63.8	77	77	102	102
	Φ2	25.5	32	32	38.5	38.5	50.2	50.2	63.8	63.8	77

SQUARE PIUG (SQ)

FEATURES

- The thread ends conform to ASME B1.20.KNPT) DIN 2999&BS21 ISO 228/1 & ISO7/1
- Dimension conform to ISO 4144,SP114 EN-10241JIS
- 150LBS
- Material conform to ASTM A351-CF8M/1.4408 ASTM A351-CF8/1.4401 ASTM A216-WCB AISI 304,304L,316,316L,301,430ETC



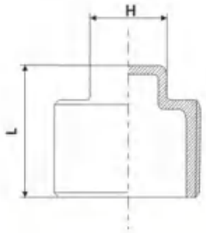

Standard	SIZE	1/8	1/4	3/8	1/2	3/4	1	11/4	11/2	2	21/2	3	4
ISO4144	H	13	15.5	16	20.5	21.5	25	27.5	28.5	33	37	42	48
	L	6	7	8	10	12	14	16	20	22	28	32	40
JIS	H	16	19	21	25	28	31	35	36	41	48	58	62
	L	7	9	12	14	17	19	23	26	32	41	45.5	57.5
SP-114	H	16	18	20	22	27	32	36	37	43	46	50	62
	L	7	9	10	11	16	19	22	22	27	32	36	58
EN-10241	H	19	20	22	25	27.5	32	35	37	39	48	52	62
	L	7	9	11	13	16	20	24	25	32	42	46	58

ROUND CAP (CB)

FEATURES

- ■The thread ends conform to
  ASME B1.20.KNPT)
  DIN 2999&BS21 ISO 228/1 & ISO7/1
- ■Dimension conform to
  ISO 4144,SP114 EN-10241JIS
- ■150LBS
- ♦Material conform to
  ASTM A351-CF8M/1.4408
  ASTM A351-CF8/1.4401 ASTM A216-WCB
  AISI 304,304L,316,316L,301,430ETC



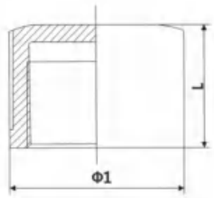

Standard	SIZE	1/8	1/4	3/8	1/2	3/4	1	11/4	11/2	2	21/2	3	4
ISO4144	Φ1	13.7	16.7	20.7	25.2	30.7	38.2	47.5	54	66.5	83.5	97	123
	L	13.5	17	17.5	21	22.5	26	29	29	33.5	38.5	42	48.5
JIS	Φ1	14	17	20	20	30	36	45	52	63	76	89	121
	L	14	15	17	24	24	28	30	32	36	40	45	54
SP-114	Φ1	19.1	21.6	26	30.6	36.5	45.1	54.9	61.9	75.6	84.3	100.7	128.6
	L	16.9	18	18.9	22	25	27	30	31.8	35.7	38.9	43.9	50.6
EN-10241	Φ1	15	18	21	27	30	38	50	55	70	92	109	132
	L	13	17	19	20	24	25	28	28	34	40	45	50

HEX.NUT (LN)

FEATURES

- ■The thread ends conform to
  ASME B1.20.KNPT)
  DIN 2999&BS21 ISO 228/1 & ISO7/1
- ■Dimension conform to
  ISO 4144,SP114 EN-10241JIS
- ■150LBS
- ■Material conform to
  ASTM A351-CF8M/1.4408
  ASTM A351-CF8/1.4401 ASTM A216-WCB
  AISI 304,304L,316,316L,301,430ETC



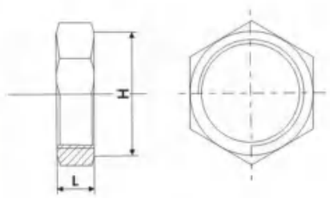

Standard	SIZE	1/8	1/4	3/8	1/2	3/4	1	11/4	11/2	2	21/2	3	4
ISO4144	H	5	6	6	7	7	9	11	11	13	15	17	20
	L	15	18	22	27	32	40	48	55	68	85	100	125
JIS	H	7	7	7.8	8	11	12	12.9	14.6	15	17	20.7	24
	L	19	19	24	30	37.7	42	52	60	72	88	98.3	125
EN-10241	H	6	7	8	10	11	10	11	12	13	15	17	20
	L	14	23	26	31	37	46	55	63	76	92	109	132

RED.SOCKET M/F (RS M/F)

FEATURES

- ■The thread ends conform to
  ASME B1.20.1(NPT)
  DIN 2999&BS21
  ISO 228/1 & ISO7/1
- ■Dimension conform to
  ISO 4144,SP114
  EN-10241JIS
- ■150LBS
- ■Material conform to
  ASTM A351-CF8M/1.4408
  ASTM A351-CF8/1.4401
  ASTM A216-WCB
  AISI 304,304L,316,316L,301,430ETC



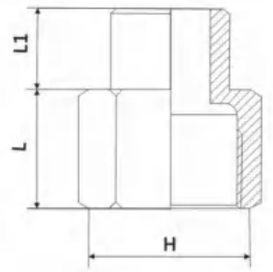

Standard	SIZE	1/4	3/8	1/2		3/4		1		11/4	
		1/8	1/4	1/4	3/8	3/8	1/2	1/2	3/4	3/4	1
IS04144	L	17	17.5	21	21	22.5	22.5	26	26	29	29
	L1	8	10.5	10.5	11	11	14.5	14.5	15.5	15.5	18
	H	17	20.5	25	25	31	31	38	38	47	47
JIS	L	15	17	24	24	24	24	28	30	29	30
	L1	8	10.5	10.5	11	11	14.5	14.5	15.5	15.5	18
	H	17	20	20	20	30	36	36	36	45	45
SP-114	L	15.5	18	23.5	23.5	24.6	24.6	29.9	29.9	30.6	30.6
	L1	12.9	12	12	12.8	12.8	15	15	17	17	19.6
	H	15.4	19.7	26.2	26.2	31.9	31.9	39.8	39.8	47.8	47.8
EN-10241	L	17	19	20	20	24	24	25	25	28	28
	L1	8.9	11	11	12.2	12.2	14.9	14.9	16.5	16.5	19.5
	H	18	21	27	27	30	30	38	38	50	50

Standard	SIZE	11/2		2		21/2		3		4	
		1	11/4	11/4	11/2	11/2	2	2	21/2	21/2	3
IS04144	L	29	29	33.5	33.5	38.5	38.5	42	42	48.8	48.5
	L1	18	20.5	20.5	20.5	20.5	25	25	27	27	30
	H	53	53	66	66	82	82	95.5	95.5	121.5	121.5
JIS	L	32	32	36	36	40	40	45	45	54	54
	L1	18	20.5	20.5	20.5	20.5	25	25	27	27	30
	H	52	52	63	63	76	76	89	89	121	121
SP-114	L	32.5	32.5	35.6	35.6	42.7	42.7	44.7	44.7	48	48
	L1	19.6	20.7	20.7	22.8	22.8	25.6	25.6	27.8	27.8	31
	H	55.9	55.9	66.5	66.5	83.3	83.3	98.2	98.2	123	123
EN-10241	L	28	28	34	34	40	40	45	45	50	50
	L1	19.5	21.5	21.5	22.2	22.2	24.4	24.4	28.5	28.5	31.7
	H	55	55	70	70	92	92	109	109	132	132

UNION CONICAL F/F (CU-Z-F/F)

FEATURES

- The thread ends conform to
  ASME B1.20.1(NPT)
  DIN 2999&BS21 ISO 228/1 & ISO7/1
- Dimension conform to
  ISO 4144,SP114 EN-10241JIS
- 150LBS
- Material conform to
  ASTM A351-CF8M/1.4408
  ASTM A351-CF8/1.4401 ASTM A216-WCB
  AISI 304,304L,316,316L,301,430ETC



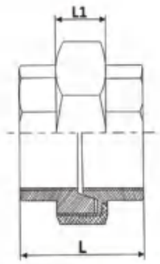

Standard	SIZE	1/8	1/4	3/8	1/2	3/4	1	11/4	11/2	2	21/2	3	4
ISO4144	L1	13	13.5	15	16	17	20	22	24	27	29.5	31	34
	L	30	33.5	36.5	39.5	42.5	50	54	58	65	75	83	110
SP-114	L1	13.5	13.5	14.5	15.5	16.5	18.5	21	23	25	27	29	32
	L	33	33	34	40	42	49	55	58	63	71	79	92
EN-10241	L1	13.5	13.5	15.5	17	19	20.5	23	26	28.5	28.5	30	34
	L	29	37.5	38	42	50.4	48	59	65	69	80	88	108

UNION TEFLON FLAT F/F (CU-T-F/F)

FEATURES

- The thread ends conform to
  ASME B1.20.1(NPT)
  DIN 2999&BS21 ISO 228/1 & ISO7/1
- Dimension conform to
  ISO 4144,SP114 EN-10241JIS
- 150LBS
- Material conform to
  ASTM A351-CF8M/1.4408
  ASTM A351-CF8/1.4401 ASTM A216-WCB
  AISI 304,304L,316,316L,301,430ETC



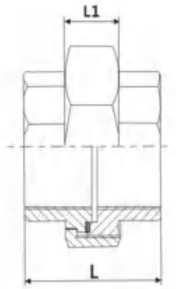

Standard	SIZE	1/8	1/4	3/8	1/2	3/4	1	11/4	11/2	2	21/2	3	4
ISO4144	H	13	13.5	15	16	17	20	22	24	27	29.5	31	34
	L	30	33.5	36.5	39.5	42.5	50	54	58	65	75	83	110
SP-114	H	13.5	13.5	14.5	15.5	16.5	18.5	21	23	25	27	29	32
	L	33	33	34	40	42	49	55	58	63	71	79	92
EN-10241	H	13.5	13.5	15.5	17	19	20.5	23	26	28.5	28.5	30	34
	L	29	37.5	38	42	50.4	48	59	65	69	80	88	108

UNION CONICAL BW/BW (CU-BW-Z)

FEATURES

- Dimension conform to
  ISO 4144,SP114 EN-10241JIS
- 150LBS
- Material conform to
  ASTM A351-CF8M/1.4408
  ASTM A351-CF8/1.4401 ASTM A216-WCB
  AISI 304,304U316,316L,301,430ETC



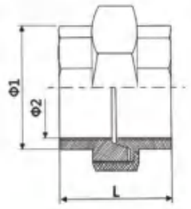

Standard	SIZE	1/8	1/4	3/8	1/2	3/4	1	11/4	11/2	2	2 1/2	3	4
ISO4144	Φ1	10.2	13.5	17.2	21.3	26.9	33.7	42.4	48.3	60.3	76.1	88.9	114.3
	Φ2	6.2	8.8	12.5	16	21.6	27.2	35.9	41.8	53	68.8	80.8	105.3
	L	26	35.5	38	44	45	50	55	57	65	71	80	95
SP-114	Φ1	10.7	13.5	17	21	26.9	33.7	42	48	60	76	88.9	114.3
	Φ2	6.5	8.8	12.3	16.7	21.6	27.2	36.3	41.5	53.3	68.9	80.8	105.3
	L	33	33	34	40	42	49	55	58	63	71	77	92
EN-10241	Φ1	10.2	13.5	17.2	21.3	26.9	33.7	42.4	48.3	60.3	76.1	88.9	114.3
	Φ2	6.2	8.8	12.5	16	21.6	27.2	35.9	41.8	53	68.8	80.8	105.3
	L	26	35.5	38	42	50.4	48	59	64	69	75	84	99

UNION TEFLON FLAT BW/BW (CU-BW-T)

FEATURES

- Dimension conform to
  ISO 4144,SP114 EN-10241JIS
- 150LBS
- Material conform to
  ASTM A351-CF8M/1.4408
  ASTM A351-CF8/1.4401
  ASTM A216-WCB
  AISI 304,304L,316,316L,301,430ETC



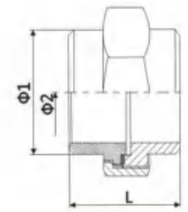

Standard	SIZE	1/8	1/4	3/8	1/2	3/4	1	11/4	11/2	2	2 1/2	3	4
ISO4144	Φ1	10.2	13.5	17.2	21.3	26.9	33.7	42.4	48.3	60.3	76.1	88.9	114.3
	Φ2	6.2	8.8	12.5	16	21.6	27.2	35.9	41.8	53	68.8	80.8	105.3
	L	26	35.5	38	44	45	50	55	57	65	71	80	95
SP-114	Φ1	10.7	13.5	17	21	26.9	33.7	42	48	60	76	88.9	114.3
	Φ2	6.5	8.8	12.3	16.7	21.6	27.2	36.3	41.5	53.3	68.9	80.8	105.3
	L	33	33	34	40	42	49	55	58	63	71	77	92
EN-10241	Φ1	10.2	13.5	17.2	21.3	26.9	33.7	42.4	48.3	60.3	76.1	88.9	114.3
	Φ2	6.2	8.8	12.5	16	21.6	27.2	35.9	41.8	53	68.8	80.8	105.3
	L	26	35.5	38	42	50.4	48	59	64	69	75	84	99

UNION CONICAL M/F (CU-Z-M/F)

FEATURES

- The thread ends conform to
  ASME B1.20.1(NPT)
  DIN 2999&BS21 ISO 228/1 & ISO7/1
- Dimension conform to
  ISO 4144,SP114 EN-10241JIS
- 150LBS
- Material conform to
  ASTM A351-CF8M/1.4408
  ASTM A351-CF8/1.4401 ASTM A216-WCB
  AISI 304,304L,316,316L,301,430ETC



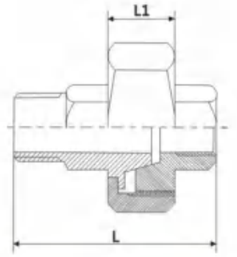

Standard	SIZE	1/8	1/4	3/8	1/2	3/4	1	11/4	11/2	2	21/2	3	4
ISO4144	L1	13	13.5	15	16	17	20	22	24	27	29.5	31	34
	L	38	44	47.5	54	58	68	74.5	78.5	90	102	113	146
SP-114	L1	13.5	13.5	14.5	15.5	16.5	18.5	21	23	25	27	29	32
	L	42.5	42.5	45.5	53.5	56.5	66.5	74	78	83	92	102	114
EN-10241	L1	13.5	13.5	15.5	17	19	20.5	23	26	28.5	28.5	30	34
	L	40	50	50	57	67	68.3	83	86.3	94	113.3	127	154

UNION TEFLON FLAT M/F(CU-T-M/F)

FEATURES

- The thread ends conform to
  ASME B1.20.1(NPT)
  DIN 2999&BS21 ISO 228/1 & ISO7/1
- Dimension conform to
  ISO 4144,SP114 EN-10241JIS
- 150LBS
- Material conform to
  ASTM A351-CF8M/1.4408
  ASTM A351-CF8/1.4401 ASTM A216-WCB
  AISI 304,304L,316,316L,301,430ETC



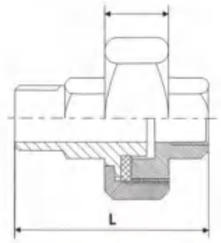

Standard	SIZE	1/8	1/4	3/8	1/2	3/4	1	11/4	11/2	2	21/2	3	4
ISO4144	L1	13	13.5	15	16	17	20	22	24	27	29.5	31	34
	L	38	44	47.5	54	58	68	74.5	78.5	90	102	113	146
SP-114	L1	13.5	13.5	14.5	15.5	16.5	18.5	21	23	25	27	29	32
	L	42.5	42.5	45.5	53.5	56.5	66.5	74	78	83	92	102	114
EN-10241	L1	13.5	13.5	15.5	17	19	20.5	23	26	28.5	28.5	30	34
	L	40	50	50	57	67	68.3	83	86.3	94	113.3	127	154

UNION CONICAL M/M (CU-Z-M/M)

FEATURES

- The thread ends conform to
  ASME B1.20.1(NPT)
  DIN 2999&BS21 ISO 228/1 & ISO7/1
- Dimension conform to
  ISO4144,SP114 EN-10241JIS
- 150LBS
- Material conform to
  ASTM A351-CF8M/1.4408
  ASTM A351-CF8/1.4401 ASTM A216-WCB
  AISI 304,304L,316,316L,301,430ETC



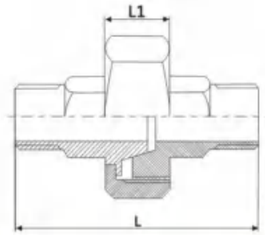

Standard	SIZE	1/8	1/4	3/8	1/2	3/4	1	11/4	11/2	2	21/2	3	4
ISO4144	L1	13	13.5	15	16	17	20	22	24	27	29.5	31	34 1
	L	46	54.5	58.5	68.5	73.5	86	95	99	115	129	143	182
SP-114	L1	13.5	13.5	14.5	15.5	16.5	18.5	21	23	25	27	29	32
	L	52	52	57	67	71	84	93	98	103	113	125	136
EN-10241	L1	13.5	13.5	15.5	17	19	20.5	23	26	28.5	28.5	30	34
	L	51	62.5	62	72	83.6	88.6	107	107.6	119	146.6	166	200.6

UNION TEFLON FLAT M/M (CU-T-M/M)

FEATURES

- The thread ends conform to
  ASME B1.20.1(NPT)
  DIN 2999&BS21 ISO 228/1 & ISO7/1
- Dimension conform to
  ISO 4144,SP114 EN-10241JIS
- 150LBS
- Material conform to
  ASTM A351-CF8M/1.4408
  ASTM A351-CF8/1.4401
  ASTM A216-WCB
  AISI 304,304L,316,316L,301,430ETC



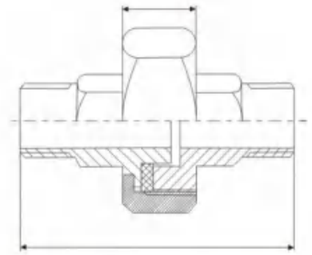

Standard	SIZE	1/8	1/4	3/8	1/2	3/4	1	11/4	11/2	2	21/2	3	4
ISO4144	L1	13	13.5	15	16	17	20	22	24	27	29.5	31	34
	L	46	54.5	58.5	68.5	73.5	86	95	99	115	129	143	182
SP-114	L1	13.5	13.5	14.5	15.5	16.5	18.5	21	23	25	27	29	32
	L	52	52	57	67	71	84	93	98	103	113	125	136
EN-10241	L1	13.5	13.5	15.5	17	19	20.5	23	26	28.5	28.5	30	34
	L	51	62.5	62	72	83.6	88.6	107	107.6	119	146.6	166	200.6

COUPLING (SPU)

FEATURES

- The thread ends conform to
  ASME B1.20.1(NPT)
  DIN 2999&BS21 ISO 228/1 & ISO7/1
- Dimension conform to
  ISO 4144,SP114 EN-10241JIS
- 150LBS
- Material conform to
  ASTM A351-CF8M/1.4408
  ASTM A351-CF8/1.4401 ASTM A216-WCB
  AISI 304,304L,316,316L/301,430ETC
- Made from casting,weld pipe or seamless pipe



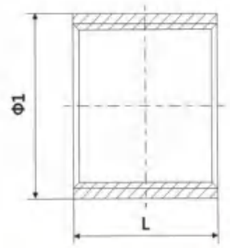

Standard	SIZE	1/8	1/4	3/8	1/2	3/4	1	11/4	11/2	2	2 1/2	3	4
ISO4144	Φ1	13	16.5	20	24.5	30	37.5	46.5	53	65.5	82	95.5	121.5
	L	17	24	25	32	35	41	45	45	54	63	69	81
JIS	Φ1	16	19	22	26	32	39	48	55	67	83.5	97	123
	L	17	19	23	27	32	38	46	48	57	69	78	96
SP-114	Φ1	14	18.5	21.5	26	32	39	48	54	66.5	82	95	122
	L	20	25	25	33	35	42	47	47	56	65	70	80
EN-10241	Φ1	15	18.5	21.3	26.4	31.8	39.5	49.3	55.5	69	87	103	126
	L	15	25	26	34	36	43	48	48	56	65	71	83

HALF COUPLING (SPE)

FEATURES

- The thread ends conform to
  ASME B1.20.1(NPT)
  DIN 2999&BS21 ISO 228/1 & ISO7/1
- Dimension conform to
  ISO 4144,SP114 EN-10241JIS
- 150LBS
- Material conform to
  ASTM A351-CF8M/1.4408
  ASTM A351-CF8/1.4401 ASTM A216-WCB
  AISI 304,304L,316,316L,301,430ETC
- Made from casting,weld pipe or seamless pipe



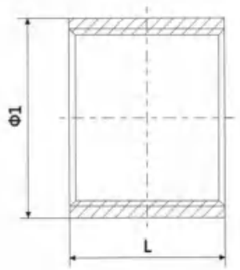

Standard	SIZE	1/8	1/4	3/8	1/2	3/4	1	11/4	11/2	2	2 1/2	3	4
ISO4144	Φ1	13	16.5	20	24.5	30	37.5	46.5	53	65.5	82	95.5	121.5
	L	7.5	11	11.5	15	16.5	19.5	21.5	21.5	26	30.5	33.5	39.5
JIS	Φ1	16	19	22	26	32	39	48	55	67	83.5	97	123
	L	8.5	11.5	12.5	15.5	17.5	20.5	22.5	22.5	27.5	31.5	34.5	42
SP-114	Φ1	14	18.5	21.5	26	32	39	48	54	66.5	82	95	122
	L	11.5	13.5	16.5	18.5	20.5	23.5	26.5	29.5	31	34	38	43
EN-10241	Φ1	15	18.5	21.3	26.4	31.8	39.5	49.3	55.5	69	87	103	126
	L	6.5	15	16.5	18	20.5	23.5	26.5	26.5	29.5	31	34.5	38

RED.SOCKET BANDED (RSB)

FEATURES

- The thread ends conform to
  ASME B1.20.1(NPT)
  DIN 2999&BS21
  ISO 228/1 & ISO7/1
- Dimension conform to
  ISO 4144,SP114 EN-10241JIS
- 150LBS
- Material conform to
  ASTM A351-CF8M/1.4408
  ASTM A351-CF8/1.4401
  ASTM A216-WCB
  AISI 304,304L,316,316L,301,430ETC



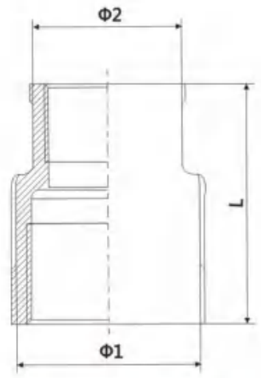

Standard	SIZE	1/4	3/8	1/2		3/4		1		11/4	
		1/8	1/4	1/4	3/8	3/8	1/2	1/2	3/4	3/4	1
IS04144	Φ1	16.5	20	25.5	25.5	31	31	38	38	47	47
	Φ2	13	16.5	16.5	20	20	24.7	24.7	31	31	38
	L	25	26	34	34	36	36	42	42	48	48
JIS	Φ1	19	22	26	26	32	32	39	39	48	49
	Φ2	16	19	19	22	22	26	26	32	32	39
	L	25	28	34	34	38	38	42	42	48	48
SP-114	Φ1	21.4	25.4	30.5	30.5	37.1	37.1	44.9	44.9	54.6	54.6
	Φ2	19.1	21.4	21.4	25.4	25.4	30.5	30.5	37.1	37.1	44.9
	L	25.4	28.5	35	32	38	38	41	41	51	51
EN-10241	Φ1	21.5	26	29	29	36.7	36.7	43	43	52.5	52.5
	Φ2	15.2	21.5	21.5	26	29	29	29	36.7	36.7	43
	L	26	29	34	34	37	37	42	42	52	52

Standard	SIZE	11/2		2		21/2		3		4	
		1	11/4	11/4	11/2	11/2	2	2	21/2	21/2	3
IS04144	Φ1	54	54	66	66	82	82	96.5	96.5	123.5	123.5
	Φ2	38	47	47	54	54	66	66	82	82	96.5
	L	52	52	58	58	65	65	72	72	94	94
JIS	Φ1	55	55	67	67	83.5	83.5	98.2	98.2	123	123
	Φ2	39	48	48	55	55	67	67	83.5	83.5	98.2
	L	52	52	58	58	65	65	72	72	94	94
SP-114	Φ1	61.7	61.7	75.2	75.2	84.1	84.1	101.6	101.6	128.5	128.5
	Φ2	44.9	54.6	54.6	61.7	61.7	75.2	75.2	84.1	84.1	101.6
	L	53.8	53.8	63.5	63.5	72.9	72.9	80.8	80.8	93.5	93.5
EN-10241	Φ1	59	59	72	72	87	87	100	100	126	126
	Φ2	43	52.5	52.5	59	59	72	72	87	87	100
	L	53	53	57	57	68	68	76	76	89	89

FEMALE HEX.HOSE NIPPLE (FHON)

FEATURES

- The thread ends conform to
  ASME B1.20.1(NPT)
  DIN 2999&BS21 ISO 228/1 & ISO7/1
- Dimension conform to
  ISO 4144,SP114 EN-10241JIS
- 150LBS
- Material conform to
  ASTM A351-CF8M/1.4408
  ASTM A351-CF8/1.4401
  ASTM A216-WCB
  AISI 304,304L,316,316L,301,430ETC

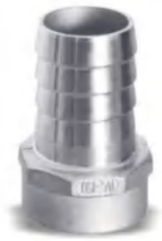

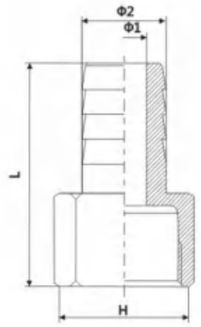

Standard	SIZE	1/8	1/4	3/8	1/2	3/4	1	11/4	11/2	2	2 1/2	3	4
ISO4144	Φ1	4	5	7	10.5	15	22	27.5	34	45	59	71	95
	Φ2	8	9	11.5	15	20	27	33	39.5	52	67	80	105
	L	39.5	45	50.5	59	67.5	78	81	85	93.5	103.5	112	121.5
	H	13.5	17	20.5	25	31	38	47	53	66	82	95.5	121.5
JIS	Φ1	5	6	8	11.5	16.5	23	28	35	47	61	73	96
	Φ2	9	11	12	16	22	29.5	36	42	54	65.5	78.5	103
	L	33	38	41	49	58	72	74	77	90	104	136	149
	H	14	17	20	20	30	36	45	52	63	76	89	121
SP-114	Φ1	4	5	6	9	15	21.5	27	33	45	55	68	91
	Φ2	7	9	10	14	20	27.5	34	40	52	63.5	76.5	103
	L	32	34	39	45	48	53	59	65	72	80	89	104
	H	13.5	15.4	19.7	26.2	31.9	39.8	47.8	55.9	66.5	83.3	98.2	123
EN-10241	Φ1	2.5	4.4	7.5	10.7	17.1	23.4	28.8	35.1	47.5	58.5	68.2	87.6
	Φ2	4.5	6.4	9.5	12.7	19.1	25.4	31.8	38.1	50.8	63.5	76.2	101.6
	L	35.7	36.2	43.1	48.6	50.6	51.3	58.1	69.2	80.2	94.1	117	128
	H	14	16	18	26	30	35	45	52	63	81	95	118

Y TYPE TEE (Y-TB)

FEATURES

- The thread ends conform to
  ASME B1.20.KNPT)
  DIN 2999&BS21
  ISO 228/1 & ISO7/1
- Dimension conform to
  ISO 4144,SP114
  EN-10241JIS
- 150LBS
- Material conform to
  ASTM A351-CF8M/1.4408
  ASTM A351-CF8/1.4401
  ASTM A216-WCB
  AISI 304,304L,316,316L,301,430ETC



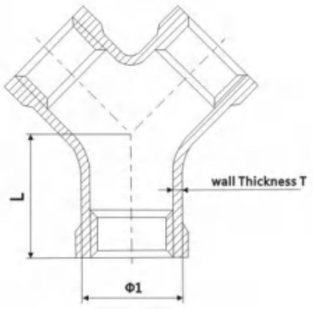

Standard	SIZE	1/8	1/4	3/8	1/2	3/4	1	11/4	11/2	2	2 1/2	3	4
ISO4144	Φ1	13	16	20	24.5	30	37.5	46.5	53	65.5	82	95.5	121.5
	L	17	19	23	27	32	38	45	48	57	69	78	96
	T	2.5	2.5	2.8	1.65	1.75	2	2.25	2.5	2.85	3.25	3.75	4.25
JIS	Φ1	16	19	22	26	32	39	48	55	67	83.5	97	123
	L	17	19	23	27	32	38	46	48	57	69	78	96
	T	2.5	2.5	2.5	2.5	3	3	3.5	3.5	4	4.5	5	5.5
SP-114	Φ1	13.5	15.4	19.7	26.2	31.9	39.8	47.8	55.9	66.5	83.3	98.2	123
	L	20.6	20.6	23.6	28.5	33.3	38.1	44.5	49	57.1	68	77.6	96.8
	T	2.7	2.7	2.7	2.7	3.2	3.2	3.8	3.8	4	4.7	5.2	6
EN-10241	Φ1	15.2	19.7	23.3	28	34.8	43.6	53	58	71	87	100	126
	L	17	18.5	22.9	26.8	32	37.5	45.9	47.6	58	70	77	97
	T	3.6	4.35	4.85	3.4	4.15	5.05	5.5	5	5.6	5.75	6	6.5

QUICK COUPLING

TYPE A

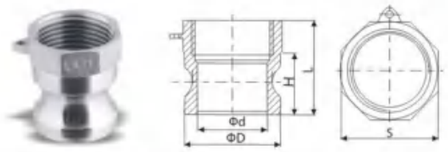

SIZE	inch	1/2	3/4	1	11/4	11/2	2	2 1/2	3	4
	mm	15	20	25	32	40	50	65	80	100
L		37	37	44	48	52.5	59	72.5	67	67
H		30	30	32	37	40	46	56	50	50
D		32	32	36.5	45.5	53.3	63	75.5	91.5	119.5
d		18.5	23	26	31	40	48	60	76	103
S		33	33	38	46.5	55	65	82	97	122

TYPE B

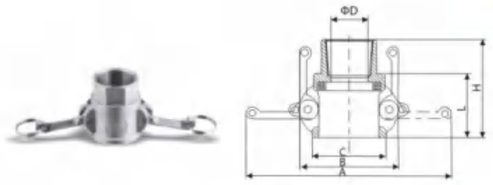

SIZE	inch	1/2	3/4	1	11/4	11/2	2	2 1/2	3	4
	mm	15	20	25	32	40	50	65	80	100
D		15	20	25	32	40	50	65	76.5	102
A		112	112	120	175	182	191	205	230	258
B		53	53	60	79	85	94	109	130	160
C		41	41	47	56	64	74	88	104	134
L		31	31	37.5	45	45	51	53	55	55
H		46	47	55	66	67.5	78.5	82.5	90	91

TYPE C

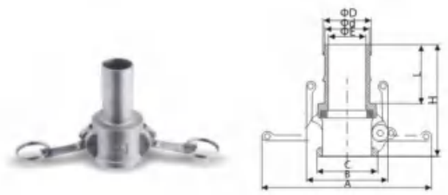

SIZE	inch	1/2	3/4	1	11/4	11/2	2	2 1/2	3	4
	mm	15	20	25	32	40	50	65	80	100
d		18.5	18.5	24	32	38	50	63	75	100
D		19.7	19.7	26	34	39	52.5	65	77	103
A		112	112	120	175	182	191	205	230	258
B		53	53	60	79	85	95	109	130	160
C		41	41	46	56	64	74	87	104	134
L		55	55	61	60	71	73	82	91	106
H		85	85	97.5	105	116	125	134	146.5	162
E		15	15	20	28	33.5	46.5	57	70	95.5

TYPE D

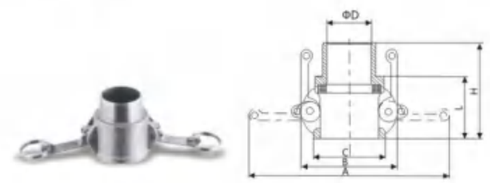

SIZE	inch	1/2	3/4	1	11/4	11/2	2	2 1/2	3	4
	mm	15	20	25	32	40	50	65	80	100
D		16.5	19.5	28	35	40	50	63.5	75	102.5
A		112	112	120	175	182	191	205	230	258
B		53	53	60	79	85	94	109	130	160
c		41	41	46	56	64	74	87	104	134
L		30	30	35.5	43	45	51	52.5	55	55
H		44	46.5	52.5	63	65	78.5	81	86	86

INOXCN
FOCUS ON STAINLESS STEEL

QUICK COUPLING

TYPE DC

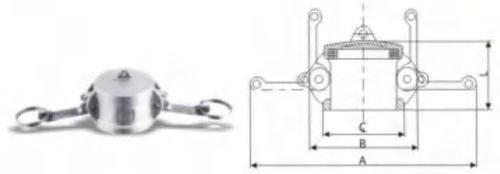

SIZE	inch	1/2	3/4	1	11/4	11/2	2	2 1/2	3	4
	mm	15	20	25	32	40	50	65	80	100
A		112	112	120	175	182	191	205	230	258
B		53	53	60	79	85	95	109	130	160
C		40.5	40.5	46	56	64	74	88	104	135
L		32	32	39	46	48.5	53.5	58	59.5	63

TYPE DP

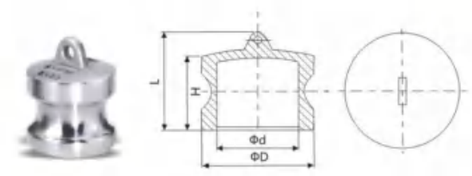

SIZE	inch	1/2	3/4	1	11/4	11/2	2	2 1/2	3	4
	mm	15	20	25	32	40	50	65	80	100
L		36	37	40	48	48	55	58	66	74
H		28	28	33	40	40	46	48	53	60
D		32	32	36.5	45.5	53.3	63	75.5	91.5	119.5
d		18.5	23	25	31	38.5	48	61	76	104

TYPE E

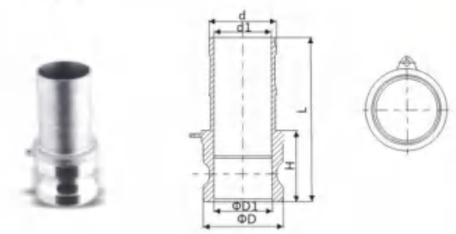

SIZE	inch	1/2	3/4	1	11/4	11/2	2	2 1/2	3	4
	mm	15	20	25	32	40	50	65	80	100
L		97	97	101	108	117	127	137	150	162
H		40	40	40	47	51	53	55	60	60
D		32	32	36.5	45.5	53.3	63	75.5	91.5	119.5
D1		21.5	21.5	25	30.5	38	47	60	76	103
d		20	20	27	34	40	53	64	77	104
d1		15	15	22	28	33	46	57	70	96

TYPE F

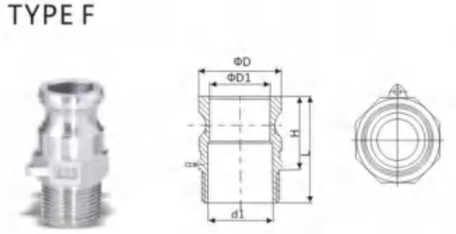

SIZE	inch	1/2	3/4	1	11/4	11/2	2	2 1/2	3	4
	mm	15	20	25	32	40	50	65	80	100
L		48	48	62	72.5	73	80.3	87	95	103
H		31.5	31.5	42	50	51	55	60	65	69
D		32	32	36.5	45.5	53.3	63	75.5	91.5	119.5
D1		22.5	22.2	26	31	40	48	60	76	102
d1		15	20	26	34	40.5	51	66	79	102

FLANGE GATE VALVE

JIS 10K/JIS 20K



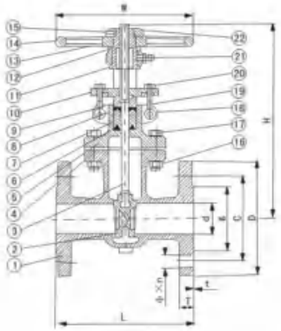

MATERIAL LIST

NO	Part Name	Material
1	Body	SCS 13、SCS 14
2	Median Plug	SUS 13、SUS 14
3	Stem	SCS 13、SCS 14
4	Sealing Gasket	PTFE
5	Cover	SCS 13、SCS14
6	Packing (under)	PTFE
7	Packing (in)	PTFE
8	Packing (on)	PTFE
9	Pressing Sleeve	SCS13
10	Pressure Plate	SCS13、SCS14
11	Lifting Cap	QT400-15、D2
12	Washer	QT400-15
13	Handwheel	QT400-15
14	Nameplate	SUS13
15	Fixed Screw	SUS13
16	Bonnet Nut	SUS13
17	Bolt	SUS13
18	Hinge Pin	SUS13
19	Slipknot Screw	SUS13
20	Nut	SUS13
21	Oil nozzle	COPPER+NICKEL COATED
22	Hand Wheel Nut	SUS13

MAIN PARAMETERS

SIZE	D	JIS 10K								
INCH	MM	L	D	C	g	T	t	W	H	Φn
15	15	108	95	70	52	13	1	100	183	Φ15×4
20	20	117	100	75	58	15	1	100	185	Φ15×4
25	25	127	125	90	70	16	1	100	226	Φ19×4
40	40	165	140	105	85	18	2	138	260	Φ19×4
50	50	178	155	120	100	18	2	160	283	Φ19×4
65	65	190	175	140	120	20	2	200	425	Φ19×4
80	80	203	185	150	130	20	2	200	450	Φ19×8
100	100	229	210	175	155	20	2	225	565	Φ19×8
125	125	254	250	210	185	22	2	280	673	Φ23×8
150	150	267	280	240	215	24	2	280	710	Φ23×8
200	200	292	330	290	265	24	2	300	860	Φ12×23
250	250	330	400	355	325	26	2	350	1012	Φ12×25
300	300	356	445	400	370	27	3	400	1231	Φ16×25

SIZE	D	JIS 20K								
INCH	MM	L	D	C	g	T	t	W	H	Φn
15	15	140	95	70	52	15	1	100	183	Φ15×4
20	20	152	100	75	58	17	1	100	185	Φ15×4
25	25	165	125	90	70	17	1	138	226	Φ19×4
40	40	190	140	105	85	20	2	200	260	Φ19×4
50	50	216	155	120	100	20	2	200	283	Φ19×8
65	65	241	175	140	120	22	2	225	425	Φ19×8
80	80	283	200	160	135	24	2	225	450	Φ23×8
100	100	305	225	185	160	26	2	280	565	Φ23×8
125	125	381	270	225	195	28	2	300	673	Φ25×8
150	150	403	305	260	230	30	2	300	710	Φ12×25
200	200	419	350	305	275	32	2	350	860	Φ12×25
250	250	457	430	380	345	36	2	400	1012	Φ12×27
300	300	502	480	430	395	39	3	450	1231	Φ16×27

STANDARD

Design: JIS B 2073/JIS B 2083
Face to Face:JIS B 2002
Flange Dimensions:JIS B 2212/JIS B 2214
Testing: API 598

APPLICATION

For general chemical and industrial services
Working temperature: -29℃~+180℃
Body Material: SCS 13A、SCS 14A

FLANGED GATE VALVE

ANSI 150/PN16



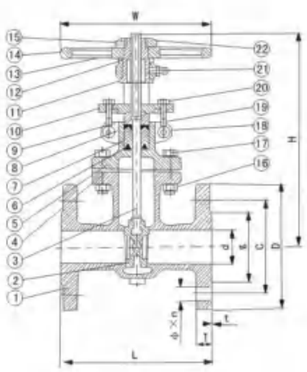

MATERIAL LIST

NO	Part Name	Material
1	Body	CF8M、CF8、CF3M
2	Median Plug	CF8M、CF8、CF3M
3	Stem	S.S304、S.S316
4	Sealing Gasket	PTFE
5	Cover	CF8M、CF8、CF3M
6	Packing (under)	PTFE
7	Packing (in)	PTFE
8	Packing (on)	PTFE
9	Pressing sleeve	S.S316
10	Pressure Plate	CF8M、CF8
11	Lifting Cap	QT400-15、D2
12	Washer	S.S304
13	Handwheel	QT400-15
14	Nameplate	S.S304
15	Fixed Screw	S.S304
16	Bonnet Nut	S.S304
17	Bolt	S.S304
18	Hinge Pin	S.S304
19	Slipknot Screw	S.S304
20	Nut	S.S304
21	Oil Nozzle	COPPER+NICKEL COATED
22	Hand Wheel Nut	S.S304

MAIN PARAMETERS

SIZE	D	ANSI 150LB								
INCH	MM	L	D	C	g	T	t	W	H	Φn
15	15	108	89	60.5	35	11.5	1.6	100	205	Φ15×4
20	20	117	98	70.0	43	12.7	1.6	100	210	Φ15×4
25	25	127	108	79.5	51	14.2	1.6	100	230	Φ15×4
40	40	165	127	98.5	73	15.0	1.6	138	280	Φ15×4
50	50	178	152	120.5	92	16.0	1.6	160	320	Φ19×4
65	65	190	178	139.5	105	18.0	1.6	200	375	Φ19×4
80	80	203	190	152.5	127	19.0	1.6	200	445	Φ19×4
100	100	229	229	190.5	157	24.0	1.6	225	523	Φ19×8
125	125	254	254	216.0	186	24.0	1.6	280	622	Φ22×8
150	150	267	279	241.5	216	26.0	1.6	280	710	Φ22×8
200	200	292	343	298.5	270	29.0	1.6	300	920	Φ22×8
250	250	330	406	362.0	324	31.0	1.6	350	1117	Φ25×12
300	300	356	483	432.0	381	32.0	1.6	400	1324	Φ25×12

SIZE	D	PN 16								
INCH	MM	L	D	C	g	T	t	W	H	Φn
15	15	108	95	65	46	14	2	100	205	Φ14×4
20	20	117	108	75	56	16	2	100	210	Φ14×4
25	25	127	115	85	65	16	3	100	230	Φ14×4
40	40	165	150	110	84	18	3	138	280	Φ18×4
50	50	178	165	125	99	20	3	160	320	Φ18×4
65	65	190	185	145	118	20	3	200	375	Φ18×4
80	80	203	200	160	132	20	3	200	445	Φ18×8
100	100	229	220	180	156	22	3	225	523	Φ18×8
125	125	254	250	210	184	22	3	280	622	Φ18×8
150	150	267	285	240	211	24	3	280	710	Φ22×8
200	200	292	340	295	266	24	3	300	920	Φ22×12
250	250	330	405	355	319	26	3	350	1117	Φ26×12
300	300	356	460	410	370	28	4	400	1324	Φ26×12

STANDARD

Design: ANSI B 16.34/GB 12234
Face to Face: ANSI B 16.10/GB 12221
Flange Dimensions: ANSI B 16.5/GB 9113.3
Testing: API 598

APPLICATION

For general chemical and industrial services
Applicable Medium:Water、Oil、Gas
Applicable Medium: -29℃~+180℃
Main material: CF8M、CF8、CF3M

FLANGE GATE VALVE

ANSI 300LB/600LB



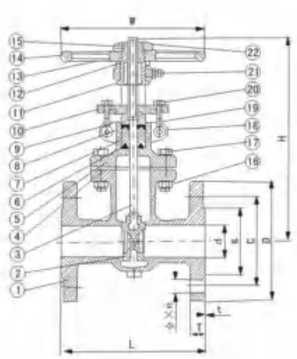

MATERIAL LIST

NO	Part Name	Material
1	Body	CF8M、CF8、CF3M
2	Median Plug	CF8M、CF8、CF3M
3	Stem	S.S304、S.S316
4	Sealing Gasket	PTFE
5	Cover	CF8M、CF8、CF3M
6	Packing (under)	PTFE
7	Packing (in)	PTFE
8	Packing (on)	PTFE
9	Pressing Sleeve	S.S316
10	Pressure Plate	CF8M、CF8
11	Lifting Cap	QT400-15、D2
12	Washer	S.S304
13	Handwheel	QT400-15
14	Nameplate	S.S304
15	Flxed Screw	S.S304
16	Bonnet Nut	S.S304
17	Bolt	S.S304
18	Hinge Pin	S.S304
19	Slipknot Screw	S.S304
20	Nut	S.S304
21	Oil Nozzle	COPPER+NICKEL COATED
22	Hand Wheel Nut	S.S304

MAIN PARAMETERS

SIZE	D	ANSI 300LB								
INCH	MM	L	D	C	g	T	t	W	H	Φn
15	15	140	95	66.5	35	15.0	1.6	100	179	Φ15×4
20	20	152	117	82.5	43	16.0	1.6	100	179	Φ19×4
25	25	165	124	89.0	51	18.0	1.6	138	221	Φ19×4
40	40	190	156	114.5	73	21.0	1.6	200	259	Φ22×4
50	50	216	165	127.0	92	23.0	1.6	200	275	Φ19×8
65	65	241	190	149.0	105	26.0	1.6	225	425	Φ22×8
80	80	283	210	168.5	127	29.0	1.6	225	450	Φ22×8
100	100	305	254	200.0	157	32.0	1.6	280	565	Φ22×8
125	125	381	279	235.0	186	35.0	1.6	300	673	Φ22×8
150	150	403	381	270.0	216	37.0	1.6	300	710	Φ22×12
200	200	419	318	330.0	270	42.0	1.6	350	860	Φ25×12
250	250	457	445	387.5	324	48.0	1.6	400	1012	Φ29×16
300	300	502	521	451.0	381	51.0	1.6	450	1231	Φ32×16

SIZE	D	ANSI 600LB								
INCH	MM	L	D	C	g	T	t	W	H	Φn
15	15	165	95	66.5	35	22.0	6.4	100	179	Φ15×4
20	20	490	118	82.5	43	23.0	6.4	100	179	Φ19×4
25	25	216	124	89.0	51	25.0	6.4	138	221	Φ19×4
40	40	241	156	114.5	73	30.0	6.4	200	259	Φ22×4
50	50	192	165	127.0	92	33.0	6.4	200	275	Φ19×4
65	65	330	190	149.0	105	36.0	6.4	225	425	Φ22×8
80	80	356	210	168.5	127	39.0	6.4	225	450	Φ22×8
100	100	432	273	216.0	157	45.0	6.4	280	565	Φ25×8
125	125	508	330	226.5	186	52.0	6.4	300	673	Φ29×8
150	150	559	356	292.0	216	55.0	6.4	300	710	Φ29×12
200	200	660	419	349.0	270	63.0	6.4	30	860	Φ32×12
250	250	787	508	432.0	324	71.0	6.4	400	1012	Φ35×16
300	300	838	559	489.0	381	74.0	6.4	450	1231	Φ35×20

STANDARD

Design: ANSI B 16.34
Face to Face: ANSI B 16.10
Flange Dimensions: ANSI B 16.5
Testing: API 598

APPLICATION

For general chemical and industrial services
Applicable Medium:Water、Oil、Gas
Working temperature: -29℃~+180℃
Main material: CF8M、CF8、CF3M

FLANGED GLODE VALVE

ANSI 150LB/GBPN16



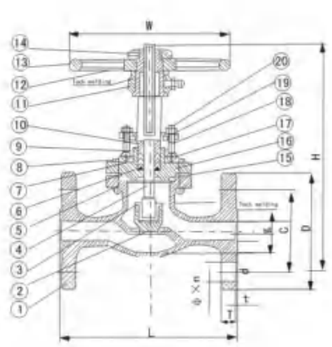

MATERIAL LIST

NO	Part Name	Material
1	Body	CF8M、CF8、CF3M
2	Median Plug	CF8M、CF8、CF3M
3	Median Plug Valve	S.S304、S.S316
4	Stem	PTFE
5	Nut	PTFE
6	Packing (under)	PTFE
7	Packing (in)	S.S316
8	Bolt	CF8M、CF8
9	Packing (on)	QT400-15、D2
10	Pressing Sleeve	S.S304
11	Lifting Cap	QT400-15
12	Handwheel	S.S304
13	Nameplate	S.S304
14	Hand Wheel Nut	S.S304
15	Sealing Gasket	S.S304
16	Cover	S.S304
17	Hinge Pin	S.S304
18	Slipknot Screw	S.S304
19	Pressure Plate	COPPER+NICKEL COATED
20	Nut Cap	S.S304

MAIN PARAMETERS

SIZE	D	ANSI 150LB								
INCH	MM	L	D	C	g	T	t	W	H	Φn
15	15	108	89	60.5	35	11.5	1.6	100	165	Φ15×4
20	20	117	98	70.0	43	12.7	1.6	100	170	Φ15×4
25	25	127	108	79.5	51	14.2	1.6	100	185	Φ15×4
40	40	165	127	98.5	73	14.3	1.6	138	218	Φ15×4
50	50	203	152	120.5	92	16.0	1.6	160	238	Φ19×4
65	65	216	178	139.5	105	18.0	1.6	200	370	Φ19×4
80	80	241	190	152.5	127	19.0	1.6	200	400	Φ19×4
100	100	292	229	190.5	157	24.0	1.6	225	470	Φ19×8
125	125	330	254	216.0	186	24.0	1.6	280	500	Φ22×8
150	150	356	279	241.5	216	26.0	1.6	280	540	Φ22×8
200	200	495	343	298.5	270	29.0	1.6	300	845	Φ22×8
250	250	622	406	362.0	324	31.0	1.6	350	1012	Φ25×12
300	300	698	483	432.0	381	32.0	1.6	400	1231	Φ25×12

SIZE	D	PN 16								
INCH	MM	L	D	C	g	T	t	W	H	Φn
15	15	108	95	65	46	14	2	100	165	Φ14×4
20	20	117	105	75	56	16	2	100	170	Φ14×4
25	25	127	115	85	65	16	3	100	185	Φ14×4
40	40	165	150	110	84	18	3	138	218	Φ18×4
50	50	203	165	125	99	20	3	160	238	Φ18×4
65	65	216	185	145	118	20	3	200	370	Φ18×4
80	80	241	200	160	132	20	3	200	400	Φ18×8
100	100	292	220	180	156	22	3	225	470	Φ18×8
125	125	330	250	210	184	22	3	280	500	Φ18×8
150	150	356	285	240	211	24	3	280	540	Φ22×8
200	200	495	340	295	266	24	3	300	845	Φ22×12
250	250	622	405	355	319	26	3	350	1012	Φ26×12
300	300	698	460	410	370	28	4	400	1231	Φ26×12

STANDARD

Design: ANSI B 16.34/GB 12234
Face to Face: ANSI B 16.10/GB 12221
Flange Dimensions: ANSI B 16.5/GB 9113.3
Testing: API 598

APPLICATION

For general chemical and industrial services
Applicable Medium:Water、Oil、Gas
Applicable Medium: -29℃~+180℃
Main material: CF8M、CF8、CF3M

FLANGE GLOBE VALVE

JIS 10K/JIS20K



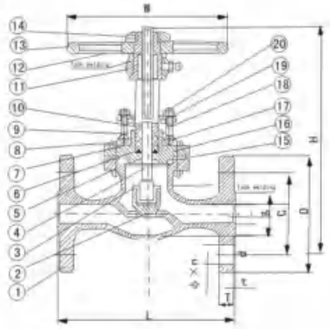

MATERIAL LIST

NO	Part Name	Material
1	Body	CF8M、CF8、CF3M、SCS314、SCS313、SCS316
2	Median Plug	S.S304、SUS304
3	Median Plug Valve	S.S304、S.S316、SUS313、SUS314
4	Stem	S.S304、S.S316、SUS313、SUS314
5	Nut	S.S304、SUS304
6	Packing (under)	PTFE
7	Packing (in)	PTFE
8	Bolt	S.S304、SUS304
9	Packing (on)	PTFE
10	Pressing Sleeve	S.S304、S.S316、SUS313、SUS314
11	Lifting Cap	QT400-15、D2
12	Handwheel	QT400-15
13	Nameplate	S.S304、SUS304
14	Hand Wheel Nut	S.S304、SUS304
15	Sealing gasket	PTFE
16	Cover	CF8M、CF8、CF3M、SCS314、SCS313、SCS316
17	Hinge Pin	S.S304、SUS304
18	Slipknot Screw	S.S304、SUS304
19	Pressure Plate	CF8M、CF8、CF3M、SCS314、SCS313、SCS316
20	Nut Cap	S.S304、SUS304

MAIN PARAMETERS

SIZE	D	JIS 10K								
INCH	MM	L	D	C	g	T	t	W	H	Φn
15	15	108	95	70	51	12	1	100	175.5	Φ15×4
20	20	117	100	75	56	14	1	100	176.5	Φ15×4
25	25	127	125	90	67	14	1	100	203	Φ19×4
40	40	165	140	105	81	16	2	138	238	Φ19×4
50	50	203	155	120	96	16	2	160	249	Φ19×4
65	65	216	175	140	120	18	2	200	370	Φ19×4
80	80	241	185	150	130	18	2	200	400	Φ19×8
100	100	292	210	175	155	18	2	225	470	Φ19×8
125	125	356	250	210	185	20	2	280	500	Φ23×8
150	150	406	280	240	215	22	2	280	540	Φ23×8
200	200	495	330	290	265	22	2	300	845	Φ23×12
250	250	622	400	355	325	24	2	350	1012	Φ25×12
300	300	698	445	400	370	24	3	400	1231	Φ25×16

SIZE	D	JIS 20K								
INCH	MM	L	D	C	g	T	t	W	H	Φn
15	15	152	95	70	51	14	1	100	175.5	Φ15×4
20	20	178	100	75	56	16	1	100	176.5	Φ15×4
25	25	203	125	90	67	16	1	138	203	Φ19×4
40	40	229	140	105	81	18	2	200	238	Φ19×4
50	50	267	155	120	96	18	2	200	249	Φ19×8
65	65	292	175	140	120	20	2	225	370	Φ19×8
80	80	318	200	160	135	22	2	225	400	Φ23×8
100	100	356	225	185	160	24	2	280	470	Φ23×8
125	125	400	270	225	195	26	2	300	500	Φ25×8
150	150	444	305	260	230	28	2	300	540	Φ25×12
200	200	559	350	305	275	30	2	350	845	Φ25×12
250	250	622	430	380	345	34	3	400	1012	Φ27×12
300	300	711	480	430	395	35	3	450	1231	Φ27×16

STANDARD

Design: ANSI B 16.34/JIS B 2071/JISB 2081
Face to Face: ANSI B 16.10/JIS B 2002
Flange Dimensions: ANSI B 16.5/JIS B 2212/JIS B 2214
Testing: API 598

APPLICATION

For general chemical and industrial services
Applicable Medium:Water、Oil、Gas
Applicable Medium: -29℃~+180℃
Body Material: CF8M、CF8、CF3M、SCS13A
SCS14A、SCS16A

ANSI VALVE
INOXCN
FOCUS ON STAINLESS STEEL

FLANGE GLOBE VALVE

ANSI 300LB/600LB



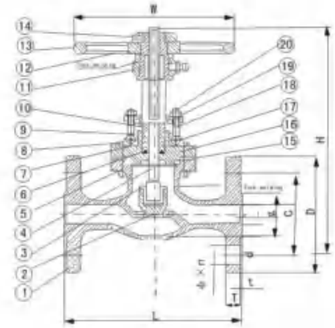

MATERIAL LIST

NO	Part Name	Material
1	Body	CF8M、CF8、CF3M、SCS314、SCS313、SCS316
2	Median Plug	S.S304、SUS304
3	Median Plug Valve	S.S304、S.S316、SUS313、SUS314
4	Stem	S.S304、S.S316、SUS313、SUS314
5	Nut	S.S304、SUS304
6	Packing (under)	PTFE
7	Packing (in)	PTFE
8	Bolt	S.S304、SUS304
9	Packing (on)	PTFE
10	Pressing Sleeve	S.S304、S.S316、SUS313、SUS314
11	Lifting Cap	QT400-15、D2
12	Handwheel	QT400-15
13	Nameplate	S.S304、SUS304
14	Hand Wheel Nut	S.S304、SUS304
15	Sealing gasket	PTFE
16	Cover	CF8M、CF8、CF3M、SCS314、SCS313、SCS316
17	Hinge Pin	S.S304、SUS304
18	Slipknot Screw	S.S304、SUS304
19	Pressure Plate	CF8M、CF8、CF3M、SCS314、SCS313、SCS316
20	Nut Cap	S.S304、SUS304

MAIN PARAMETERS

SIZE	D	ANSI 300LB								
INCH	MM	L	D	C	g	T	t	W	H	Φn
15	15	152	95	66.5	35	15.0	1.6	100	175.5	Φ15×4
20	20	178	117	82.5	43	16.0	1.6	100	176.5	Φ19×4
25	25	203	124	89.0	51	18.0	1.6	138	203	Φ19×4
40	40	229	156	114.5	73	21.0	1.6	200	238	Φ22×4
50	50	267	165	127.0	92	23.0	1.6	200	249	Φ19×8
65	65	292	190	149.0	405	26.0	1.6	225	370	Φ22×8
80	80	318	210	168.5	127	29.0	1.6	225	400	Φ22×8
100	100	356	254	200.0	157	32.0	1.6	280	470	Φ22×8
125	125	400	279	235.0	186	35.0	1.6	300	500	Φ22×8
150	150	444	318	270.0	216	37.0	1.6	300	540	Φ22×12
200	200	559	381	330.0	270	42.0	1.6	350	845	Φ25×12
250	250	622	445	387.5	324	48.0	1.6	400	1012	Φ29×16
300	300	711	521	451.0	381	51.0	1.6	450	1231	Φ32×16

SIZE	D	ANSI 600LB								
INCH	MM	L	D	C	g	T	t	W	H	Φn
15	15	165	95	66.5	35	22.0	6.4	100	175.5	Φ15×4
20	20	190	118	82.5	43	23.0	6.4	100	176.5	Φ19×4
25	25	216	124	89.0	51	25.0	6.4	138	203	Φ19×4
40	40	241	156	114.5	73	30.0	6.4	200	238	Φ22×4
50	50	292	165	127.0	92	33.0	6.4	200	249	Φ19×8
65	65	330	190	149.0	105	36.0	6.4	225	370	Φ22×8
80	80	356	210	168.5	127	39.0	6.4	225	400	Φ22×8
100	100	432	273	216.0	157	45.0	6.4	280	470	Φ25×8
125	125	508	330	266.5	186	52.0	6.4	300	500	Φ29×8
150	150	559	356	292.0	216	55.0	6.4	300	540	Φ29×12
200	200	660	419	349.0	270	63.0	6.4	350	845	Φ32×12
250	250	787	508	432.0	324	71.0	6.4	400	1012	Φ35×16
300	300	838	559	489.0	381	74.0	6.4	450	1231	Φ35×20

STANDARD

Design: ANSI B 16.34/JIS B 2071/JISB 2081
Face to Face: ANSI B 16.10/JIS B 2002
Flange Dimensions: ANSI B 16.5/JIS B 2212/JIS B 2214
Testing: API 598

APPLICATION

For general chemical and industrial services
Applicable Medium:Water、Oil、Gas
Applicable Medium: -29℃~+180℃
Body Material: CF8M、CF8、CF3M、SCS13A
SCS14A、SCS16A

SWING FLANGE CHECK VALVE

ANSI 300LB/600LB



MATERIAL LIST

NO	Part Name	Material
1	Body	CF8M、CF8/SCS14A、SCS13A
2	Median Plug	S.S316、S.S304/SUS14、SUS13
3	Nut	S.S316/SUS14
4	Washer	S.S316/SUS14
5	Rocker	CF8M、CF8/SCS14A、SCS13A
6	Pin shaft	S.S316/SUS14
7	Nut	S.S304/SUS13(8)
8	Sealing Gasket	PTFE
9	Cover	CF8M、CF8/SCS14A、SCS13A
10	Nameplate	S.S304/SUS13
11	Bolt	S.S304/SUS13(B8)

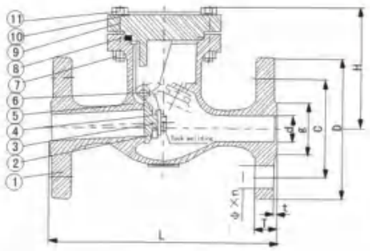

MAIN PARAMETERS

SIZE INCH	D MM	ANSI 300LB L	D	C	g	T	t	H	Φn
15	15	152	95	66.5	35	15	1.6	84	Φ15×4
20	20	178	117	82.5	43	16	1.6	85	Φ19×4
25	25	203	124	89.0	51	18	1.6	88	Φ19×4
40	40	229	156	114.5	73	21	1.6	91	Φ22×4
50	50	267	165	127.0	92	23	1.6	98	Φ19×8
65	65	292	190	149.0	105	26	1.6	125	Φ22×8
80	80	318	210	168.5	127	29	1.6	145	Φ22×8
100	100	356	254	200.0	157	32	1.6	165	Φ22×8
125	125	400	279	235.0	186	35	1.6	190	Φ22×8
150	150	444	318	270.0	216	37	1.6	210	Φ22×12
200	200	533	381	330.0	270	42	1.6	242	Φ25×12
250	250	622	445	387.5	324	48	1.6	295	Φ29×16
300	300	711	521	451.0	381	51	1.6	376	Φ32×16

SIZE INCH	D MM	ANSI 600LB L	D	C	g	T	t	H	Φn
15	15	165	95	66.5	35	22.0	6.4	84	Φ15×4
20	20	190	118	82.5	43	23.0	6.4	85	Φ19×4
25	25	216	124	89.0	51	25.0	6.4	88	Φ19×4
40	40	241	156	114.5	73	30.0	6.4	91	Φ22×4
50	50	292	165	127.0	92	33.0	6.4	98	Φ19×8
65	65	330	190	149.0	105	36.0	6.4	125	Φ22×8
80	80	356	210	168.5	127	39.0	6.4	145	Φ22×8
100	100	432	273	216.0	157	45.0	6.4	165	Φ25×8
125	125	508	330	266.5	186	52.0	6.4	190	Φ29×8
150	150	559	356	292.0	216	55.0	6.4	210	Φ29×12
200	200	660	419	349.0	270	63.0	6.4	242	Φ32×12
250	250	787	508	432.0	324	71.0	6.4	295	Φ35×16
300	300	838	559	489.0	381	74.0	6.4	376	Φ35×20

STANDARD

Design: ANSI B 16.34/JIS B 2074/JISB 2084
Face to Face: ANSI B 16.10/JIS B 2002
Flange Dimensions: ANSI B 16.5/JIS B 2212/JIS B 2214
Testing: API 598

APPLICATION

For general chemical and industrial services
Applicable Medium:Water、Oil、Gas
Applicable Medium: -29℃~+180℃
Body Material: CF8M、CF8、CF3M、SCS13A
SCS14A、SCS16A

SWING FLANGED CHECK VALVE

ANSI 150LB/GBPN16



MATERIAL LIST

NO	Part Name	Material
1	Body	CF8M、CF8
2	Median Plug	CF8M、CF8
3	Nut	S.S316
4	Washer	S.S316
5	Rocker	CF8M、CF8
6	Nut	S.S304
7	Sealing Gasket	PTFE
8	Cover	CF8M、CF8
9	Nameplate	S.S304
10	Bolt	S.S304
11	Plug	S.S316
12	Gasket	PTFE
13	Pin shaft	S.S304、S.S316

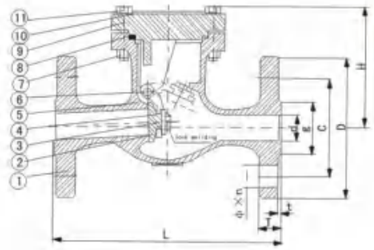

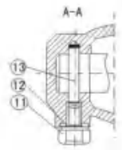

MAIN PARAMETERS

SIZE INCH	D MM	ANSI 150LB L	D	C	g	T	t	H	Φn
15	15	108	89	60.5	35	11.5	1.6	60	Φ15×4
20	20	117	98	70.0	43	12.7	1.6	70	Φ15×4
25	25	127	108	79.5	51	14.2	1.6	80	Φ15×4
40	40	165	127	98.5	73	14.3	1.6	104	Φ15×4
50	50	203	152	120.5	92	16.0	1.6	117	Φ19×4
65	65	216	178	139.5	405	18.0	1.6	168	Φ19×4
80	80	241	190	152.5	127	19.0	1.6	184	Φ19×4
100	100	292	229	190.5	157	24.0	1.6	203	Φ19×8
125	125	330	254	216.0	186	24.0	1.6	255	Φ22×8
150	150	356	279	241.5	216	26.0	1.6	277	Φ22×8
200	200	495	343	298.5	270	29.0	1.6	330	Φ22×8
250	250	622	406	362.0	324	31.0	1.6	381	Φ25×12
300	300	698	483	432.0	381	32.0	1.6	410	Φ25×12

SIZE INCH	D MM	PN 16 L	D	C	g	T	t	H	Φn
15	15	108	95	65	46	14	2	60	Φ14×4
20	20	117	105	75	56	16	2	70	Φ14×4
25	25	127	115	85	65	16	3	80	Φ14×4
40	40	165	150	110	84	18	3	104	Φ18×4
50	50	203	165	125	99	20	3	117	Φ18×4
65	65	216	185	145	118	20	3	168	Φ18×4
80	80	241	200	160	132	20	3	181	Φ18×8
100	100	292	220	180	156	22	3	203	Φ18×8
125	125	330	250	210	184	22	3	255	Φ18×8
150	150	356	285	240	211	24	3	277	Φ22×8
200	200	495	340	295	266	24	3	330	Φ22×12
250	250	622	405	355	319	26	3	381	Φ26×12
300	300	695	460	410	370	28	4	410	Φ26×12

STANDARD

Design: ANSI B 16.34/GB 12236
Face to Face: ANSI B 16.10/GB 12221
Flange Dimensions: ANSI B 16.5/GB 9113.1
Testing: API 598

APPLICATION

For general chemical and industrial services
Applicable Medium:Water、Oil、Gas
Applicable Medium: -29℃~+180℃
Body Material: CF8M、CF8、CF3M

SWING FLANGE CHECK VALVE

JIS 10K/20K



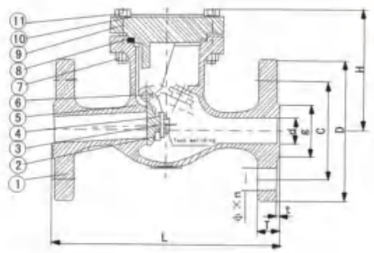

MATERIAL LIST

NO	Part Name	Material
1	Body	CF8M、CF8/SCS14A、SCS13A
2	Median plug	S.S316、S.S304/SUS14、SUS13
3	Nut	S.S316/SUS14
4	Washer	S.S316/SUS14
5	Rocker	CF8M、CF8/SCS14A、SCS13A
6	Pin shaft	S.S316/SUS14
7	Nut	S.S304/SUS13(8)
8	Sealing gasket	PTFE
9	Cover	CF8M、CF8/SCS14A、SCS13A
10	Nameplate	S.S304/SUS13
11	Bolt	S.S304/SUS13(B8)

MAIN PARAMETERS

SIZE	D	JIS 10K							
INCH	MM	L	D	C	g	T	t	H	Φn
15	15	108	95	70	52	12	1	84	Φ15×4
20	20	117	100	75	58	14	1	85	Φ15×4
25	25	127	125	90	70	14	1	88	Φ19×4
40	40	165	140	105	85	16	2	91	Φ19×4
50	50	203	155	120	100	16	2	98	Φ19×4
65	65	216	175	140	120	18	2	125	Φ19×4
80	80	241	185	150	130	18	2	145	Φ19×8
100	100	292	210	175	155	18	2	165	Φ19×8
125	125	330	250	210	185	20	2	190	Φ23×8
150	150	356	280	240	215	22	2	210	Φ23×8
200	200	495	330	290	265	22	2	242	Φ23×12
250	250	622	400	355	325	24	2	295	Φ25×12
300	300	698	445	400	370	24	3	376	Φ25×16

SIZE	D	JIS 20K							
INCH	MM	L	D	C	g	T	t	H	Φn
15	15	152	95	70	52	14	1	84	Φ15×4
20	20	178	100	75	58	16	1	85	Φ15×4
25	25	216	125	90	70	16	1	88	Φ19×4
40	40	241	140	105	85	18	2	91	Φ19×4
50	50	267	155	120	100	18	2	98	Φ19×8
65	65	292	175	140	120	20	2	125	Φ19×8
80	80	318	200	160	135	22	2	145	Φ23×8
100	100	356	225	185	160	24	2	165	Φ23×8
125	125	400	270	225	195	26	2	190	Φ25×8
150	150	444	305	260	230	28	2	210	Φ25×12
200	200	533	350	305	275	30	2	242	Φ25×12
250	250	622	430	380	345	34	2	295	Φ27×12
300	300	711	480	430	395	35	3	376	Φ27×16

STANDARD

Design: ANSI B 16.34/JIS B 2074/JISB 2084
Face to Face: ANSI B 16.10/JIS B 2002
Flange Dimensions: ANSI B 16.5/JIS B 2212/JIS B 2214
Testing: API 598

APPLICATION

For general chemical and industrial services
Applicable Medium:Water、Oil、Vapour
Applicable Medium: -29℃~+180℃
Body Material: CF8M、CF8、CF3M、SCS13A
SCS14A、SCS16A

"A" TYPE WAFER BUTTERFLY VALVE



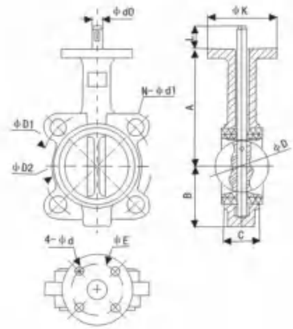

DN40-DN500

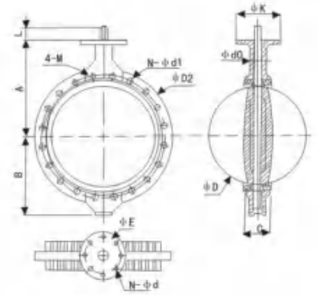

DN600-DN1200 PN10/PN16

MAIN PARAMETERS

Size		A	B	C	ΦD	L	ΦD1	n-Φd1	ΦK	ΦE	n-Φd	Φd0	ΦD2	4-M	Weight
mm	inch														
40	1.5"	135	75	33	43	32	110	4-Φ18	70	50	4-Φ7	12.6	90	–	2.3
50	2"	161	80	43	52.9	32	125	4-Φ18	70	50	4-Φ7	12.6	118	–	2.5
65	2.5"	175	89	46	64.5	32	145	4-Φ18	70	50	4-Φ7	12.6	137	–	3.2
80	3"	181	95	46	78.8	32	160	8-Φ18	70	50	4-Φ7	12.6	143	–	3.6
100	4"	200	114	52.1	104	32	180	8-Φ18	90	70	4 - Φ9	15.77	156	–	4.9
125	5"	213	127	56	123.3	32	210	8-Φ18	90	70	4 - Φ9	18.92	190	–	7
150	6"	226	139	56	155.6	32	240	8-Φ23	90	70	4 - Φ9	18.92	212	–	7.8
200	8"	260	175	60.6	202.5	45	295	8/12-Φ23	125	102	4-Φ12	22.1	268	–	13.2
250	10"	292	203	65.6	250.5	45	350/335	12-Φ23/26	125	102	4-Φ12	28.45	325	–	19.2
300	12"	337	242	76.9	301.6	45	400/410	12-Φ23/26	140	102	4-Φ12	31.6	403	–	32.5
350	14"	368	267	76.5	333.3	45	460/470	16-Φ23/26	140	102	4-Φ14	31.6	436	–	41.3
400	16"	400	309	86.5	389.6	51.2	515/525	16-Φ23/30	197	159	4-Φ21	33.15	488	–	61
450	18"	422	328	105.6	440.5	51.2	565/585	20-Φ26/30	197	159	4-Φ21	38	539	–	79
500	20"	480	361	131.8	491.6	64.2	620/650	20-Φ26/33	197	159	4-Φ21	41.15	593	–	128
600	24"	562	459	152	592.5	70.2	725/770	20-Φ30/36	276	216	4-Φ23	50.65	816	–	188
700	28"	624	520	163	695	82	840	24-Φ30/36	300	254	8-Φ18	55	890	4-M27	284
800	32"	672	591	188	794.7	82	950	24-Φ33/39	300	254	8-Φ18	55	1025	–	368
900	36"	720	656	203	864.7	118	1050	28-Φ33/39	300	254	8-Φ18	75	1115	4-M30	713
1000	40"	800	721	216	965	142	1160/1170	28-Φ36/42	300	254	8-Φ18	85	1230	4-M33	864
1200	48"	940.7	844.1	276	1160	142	1380/1390	32-Φ39/49	300	254	8-Φ18	105	1450	4-M36	980

API FORGED STEEL GATE VALVE

800LB



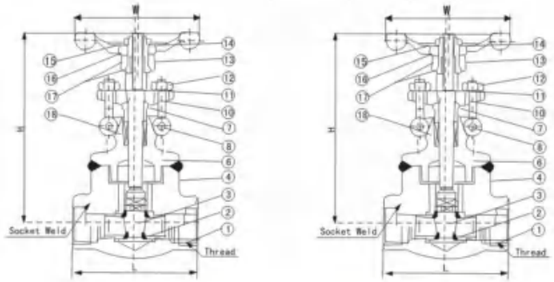

DIMENSIONS(MM)AND WIGHTS(KG)

Path	Reducing	3/8 "	1/2 "	3/4 "	1 "	1-1/4 "	1-1/2 "	2 "	/
	Full	/	3/8 "	1/2 "	3/4 "	1 "	1-1/4 "	1-1/2 "	2 "
L		79	79	92	111	120	120	140	178
H(开OPEN)		158	158	169	194	236	246	283	330
W		100	100	100	125	160	160	180	200
Weight	Bolted	2.1	2.0	2.3	4.3	5.9	6.9	11.1	15.2
	Welded	1.8	1.7	2.0	3.8	5.1	6.1	10.2	14.2

MATERIAL LIST

NO	Part Name	CS to ASTM Type A 105	AS to ASTM Type F22	SS to ASTM Type F304(L)	SS to ASTM Type F316(L)
1	Body	A 105	A182F22	A182F304(L)	A182F316(L)
2	Seat	A276 420	A276 304	A276 304(L)	A276 316L)
3	Gate board	A276 430&410	A182F304	A182F304(L)	A182F316(L)
4	Stem	A182 F6	A182 F304	A182 F304(L)	A182 F316(L)
5	Gasket	Corrugated SS+graphite		SS +PTFE	
6	Cover	A 105	A182 F22	A182 F304(L)	A182 F316(L)
7	Bolt	A193 B7	A193 B16	A193 B8	A193 B8
8	Cylindrical pin	A 276 420		A182 F304	
9	Packing set	A 276 410		A 182 F304(L)	A 182 F316(L)
10	Articulated bolt	A 193 B7	A 193 B16	A193 B8	A193 B8M
11	packing gland	A105	A182 F11	A182 F304(L)	A182 F316(L)
12	Nut	A194 2H	A194 4	A194 8	A194 8
13	Stem nut	A 276 420			
14	Hand wheel lock nut	A194 2H	A194 4	A194 8	A194 8M
15	Nameplate	SS			
16	Handwheel	A197			
17	Liner gasket	A473 431			
18	Packing	Flexible Graphite		PTFE	
Suitable Medium		W.O.G.etc		HNO_3,CH_3OOHetc	
Suitable Temperature		-29℃~425℃	-29℃~550℃	-29℃~180℃	

Note:Other materials are available upon request. CS=Carbon Steel AS=Alloy Steel SS=Stainless Steel;

API FORGED STEEL GATE VALVE

900LB~1500LB

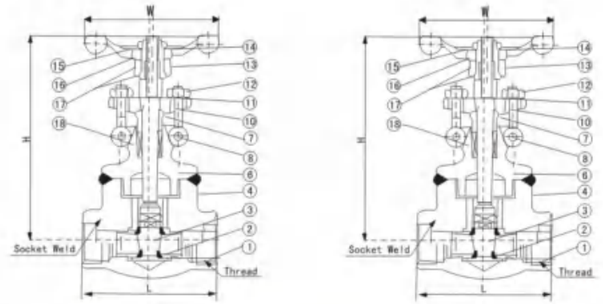

DIMENSIONS(MM)AND WIGHTS(KG)

Path	Reducing	3/8 "	1/2 "	3/4 "	1 "	1-1/4 "	1-1/2 "	2 "	/
	Full	/	3/8 "	1/2 "	3/4 "	1 "	1-1/4 "	1-1/2 "	2 "
L		92	111	111	120	120	140	178	210
H(OPEN)		169	197	197	236	246	283	330	354
W		100	125	125	160	160	180	200	240
Weight	Bolted	2.5	4.3	4.2	6.6	8.8	12.5	17.2	23.5
	Welded	2.4	4.2	4.0	6.3	8.7	12.1	17.2	22.0

MATERIAL LIST

NO	Part Name	CS to ASTM Type A 105	AS to ASTM Type F22	SS to ASTM Type F304(L)	SS to ASTM Type F316(L)
1	Body	A 105	A182F22	A182F304(L)	A182F316(L)
2	Seat	A276 420	A276 304	A276 304(L)	A276 316L)
3	Gate board	A182 430&410	A182F304	A182F304(L)	A182F316(L)
4	Stem	A182 F6	A182 F304	A182 F304(L)	A182 F316(L)
5	Gasket	Corrugated SS+graphite		SS +PTFE	
6	Cover	A 105	A182 F22	A182 F304(L)	A182 F316(L)
7	Bolt	A193 B7	A193 B16	A193 B8	A193 B8
8	Cylindrical pin	A 276 420		A182 F304	
9	Packing set	A 276 410		A 182 F304(L)	A 182 F316(L)
10	Articulated bolt	A 193 B7	A 193 B16	A193 B8	A193 B8M
11	Packing pressure plate	A105	A182 F11	A182 F304(L)	A182 F316(L)
12	Nut	A194 2H	A194 4	A194 8	A194 8
13	Stem nut	A 276 420			
14	Hand wheel lock nut	A194 2H	A194 4	A194 8	A194 8M
15	Nameplate	SS			
16	Handwheel	A197			
17	Liner gasket	A473 431			
18	Packing	Flexible Graphite		PTFE	
Suitable Medium		W.O.G.etc		HNO_3,CH_3OOHetc	
Suitable Temperature		-29℃~425℃	-29℃~550℃	-29℃~180℃	

Note:Other materials are available upon request. CS=Carbon Steel AS=Alloy Steel SS=Stainless Steel;

API FORGED STEEL FLANGE END GATE VALVE

150LB~600LB



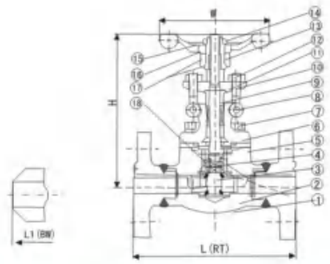

DIMENSIONS(MM)AND WIGHTS(KG)

Path			1/ 2 "	3/ 4 "	1 "	1-1/ 4 "	1-1/ 2 "	2 "
L(RF) L1(BW)	150Lb		108	117	127	140	165	203
	300Lb		145	152	165	178	190	216
	300Lb		165	190	216	229	241	292
H(Open)	150,300Lb		158	169	197	236	246	283
	600Lb		169	197	236	246	283	320
W			100	100	125	160	160	180
Weight	150	RTJ	4.5	5.2	8.2	11.5	12.5	20.3
		BW	2.8	3.3	5.4	7.1	8.2	12.5
	300	RTJ	4.8	6.2	9.3	14	15.5	23.4
		BW	3.5	4.4	6.8	8.1	9.2	15.4
	600	RTJ	5.9	7.4	10.4	16.2	17.5	28.3
		BW	4.5	5.1	8.2	10.5	12.4	20.1

MATERIAL LIST

NO	Part Name	CS to ASTM Type A 105	AS to ASTM Type F22	SS to ASTM Type F304(L)	SS to ASTM Type F316(L)
1	Body	A 105	A182F22	A182F304(L)	A182F316(L)
2	Seat Ring	A276 420	A276 304	A276 304(L)	A276 316L)
3	Gate board	A182 430&410	A182F304	A182F304(L)	A182F316(L)
4	Stem	A182 F6a	A182 F304	A182 F304(L)	A182 F316(L)
5	Gasket	Corrugated SS+graphite		SS +PTFE	
6	Cover	A 105	A182 F22	A182 F304(L)	A182 F316(L)
7	Cover Bolt	A193 B7	A193 B16	A193 B8	A193 B8M
8	Cylindrical pin	A 276 420		A276 304	
9	Packing set	A 276 410		A 182 F304(L)	A 182 F316(L)
10	Articulated bolt	A 193 B7	A 193 B16	A193 B8	A193 B8M
11	Packing pressure plate	A105		A182 F304	
12	Nut	A194 2H	A194 4	A194 8	A194 8M
13	Stem nut	A 276 420			
14	Lock nut	A194 2H	A194 4	A194 8	A194 8M
15	Nameplate	SS			
16	Handwheel	A197			
17	Lubrication gasket	A273 431			
18	Packing	Flexible Graphite		PTFE	
Suitable Medium		W.O.G.etc		HNO_3,CH_3OOHetc	
Suitable Temperature		-29℃~425℃	-29℃~550℃	-29℃~180℃	

Note:Other materials are available upon request. CS=Carbon Steel AS=Alloy Steel SS=Stainless Steel;

ANSI VALVE
INOXCN
FOCUS ON STAINLESS STEEL

API FORGED STEEL FLANGE END GATE VALVE

900LB~1500LB



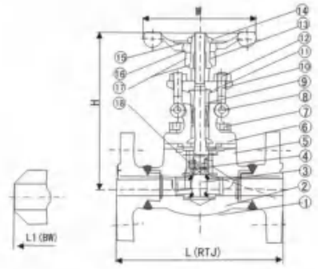

DIMENSIONS(MM)AND WIGHTS(KG)

Path		1/ 2 "	3/ 4 "	1 "	1-1/ 4 "	1-1/ 2 "	2 "
L(RF)	900-1500Lb	216	229	254	279	305	371
L1(BW)	900-1500Lb	216	229	254	279	305	368
H(Open)		197	197	236	246	283	330
W		125	125	160	160	180	200
Weight	RTJ	7.2	11.5	15.6	16.2	22.6	32.8
	BW	5.2	9.3	12.4	13.8	18.9	27.5

MATERIAL LIST

NO	Part Name	CS to ASTM Type A 105	AS to ASTM Type F22	SS to ASTM Type F304(L)	SS to ASTM Type F316(L)
1	Body	A 105	A182F22	A182F304(L)	A182F316(L)
2	Seat Ring	A276 420	A276 304	A276 304(L)	A276 316L)
3	Gate board	A182 430	A182F304	A182F304(L)	A182F316(L)
4	Stem	A182 F6	A182 F304	A182 F304(L)	A182 F316(L)
5	Gasket	Corrugated SS+graphite		SS +PTFE	
6	Cover	A 105N	A182 F22	A182 F304(L)	A182 F316(L)
7	Cover Bolt	A193 B7	A193 B16	A193 B8	A193 B8M
8	Cylindrical pin	A 276 420		A276 304	
9	Packing set	A 276 410		A 182 F304(L)	A 182 F316(L)
10	Articulated bolt	A 193 B7	A 193 B16	A193 B8	A193 B8M
11	Packing pressure plate	A105		A182 F304	
12	Nut	A194 2H	A194 4	A194 8	A194 8M
13	Stem nut	A 276 420			
14	Lock nut	A194 2H	A194 4	A194 8	A194 8M
15	Nameplate	SS			
16	Handwheel	A197			
17	Lubrication gasket	A473 431			
18	Packing	Flexible Graphite		PTFE	
Suitable Medium		W.O.G.etc		HNO_3,CH_3OOHetc	
Suitable Temperature		-29℃~425℃	-29℃~550℃	-29℃~180℃	

Note:Other materials are available upon request. CS=Carbon Steel AS=Alloy Steel SS=Stainless Steel;

API FORGED STEEL GLOBE VALVE

800LB



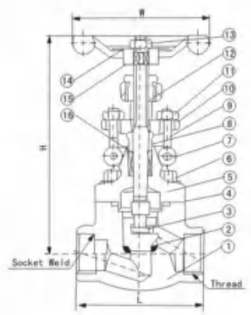

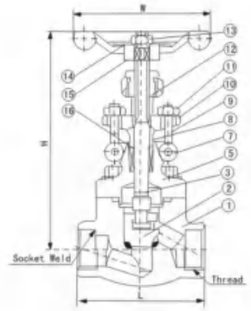

DIMENSIONS(MM)AND WIGHTS(KG)

Path	Reducing	3/8 "	1/2 "	3/4 "	1 "	1-1/4 "	1-1/2 "	2 "	/
	Full	/	3/8 "	1/2 "	3/4 "	1 "	1-1/4 "	1-1/2 "	2 "
L		79	79	92	111	120	152	172	200
H(OPEN)		166	166	171	207	240	258	330	355
W		100	100	100	125	160	160	180	200
Weight	Bolted	1.9	1.9	2..1	3.5	6.0	7.5	11.4	14.6
	Welded	1.7	1.7	1.9	3.3	5.2	6.8	10.6	13.8

MATERIAL LIST

NO	Part Name	CS to ASTM Type A 105	AS to ASTM Type F22	SS to ASTM Type F304(L)	SS to ASTM Type F316(L)
1	Body	A 105	A182F22	A182F304(L)	A182F316(L)
2	Disc	A276 420	A276 F22	A276 304(L)	A276 316L)
3	Stem	A182 F6	A182	A182F304(L)	A182F316(L)
4	Gasket	Corrugated SS+graphite		SS +PTFE	
5	Cover	A 105N	A182 F22	A182 F304(L)	A182 F316(L)
6	Cover Bolt	A193 B7	A193 B16	A193 B8	A193 B8
7	Cylindrical pin	A 276 420		A276 304	
8	Packing set	A 276 410		A 182 F304(L)	A 182 F316(L)
9	Articulated bolt	A 193 B7	A 193 B16	A193 B8	A193 B8M
10	Packing pressure plate	A105		A182 F304	
11	Nut	A194 2H	A194 4	A194 8	A194 8M
12	Stem nut	A 276 420			
13	Nut	A194 2H	A194 4	A194 8	A194 8M
14	Nameplate	SS			
15	Handwheel	A197			
16	Packing	Flexible Graphite		PTFE	
Suitable Medium		W.O.G.etc		HNO_3,CH_3OOHetc	
Suitable Temperature		-29℃~425℃	-29℃~550℃	-29℃~180℃	

Note:Other materials are available upon request. CS=Carbon Steel AS=Alloy Steel SS=Stainless Steel;

API FORGED STEEL GLOBE VALVE

900LB-1500LB

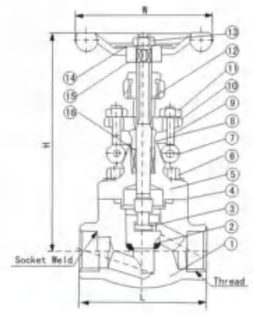

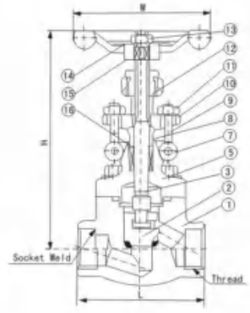

DIMENSIONS(MM)AND WIGHTS(KG)

Path	Reducing	3/8 "	1/2 "	3/4 "	1 "	1-1/4 "	1-1/2 "	2 "	/
	Full	/	3/8 "	1/2 "	3/4 "	1 "	1-1/4 "	1-1/2 "	2 "
L		92	111	111	120	152	172	200	220
H(OPEN)		171	207	207	240	258	330	355	370
W		100	125	125	160	160	180	200	240
Weight	Bolted	2.2	3.7	3.6	6.8	7.6	11.6	15.0	21.9
	Welded	2.0	3.4	3.3	6.0	5.6	10.3	14.2	18.0

MATERIAL LIST

NO	Part Name	CS to ASTM Type A 105	AS to ASTM Type F22	SS to ASTM Type F304(L)	SS to ASTM Type F316(L)
1	Body	A 105	A182 F22	A182F304(L)	A182F316(L)
2	Disc	A276 420	A276 F22	A276 304(L)	A276 316L)
3	Stem	A182 F6	A182 F22	A182F304(L)	A182F316(L)
4	Gasket	Corrugated SS+graphite		SS +PTFE	
5	Cover	A 105N	A182 F22	A182 F304(L)	A182 F316(L)
6	Cover Bolt	A193 B7	A193 B16	A193 B8	A193 B8
7	Cylindrical pin	A 276 420		A276 304	
8	Packing set	A 276 410		A 182 F304(L)	A 182 F316(L)
9	Articulated bolt	A 193 B7	A 193 B16	A193 B8	A193 B8M
10	Packing pressure plate	A105		A182 F304	
11	Nut	A194 2H	A194 4	A194 8	A194 8M
12	Stem nut	A 276 420			
13	Nut	A194 2H	A194 4	A194 8	A194 8M
14	Nameplate	SS			
15	Handwheel	A197			
16	Packing	Flexible Graphite		PTFE	
Suitable Medium		W.O.G.etc		HNO_3,CH_3OOHetc	
Suitable Temperature		-29℃~425℃	-29℃~550℃	-29℃~180℃	

Note:Other materials are available upon request. CS=Carbon Steel AS=Alloy Steel SS=Stainless Steel;

API FORGED STEEL FLANGE GLOBE VALVE

800LB~600LB



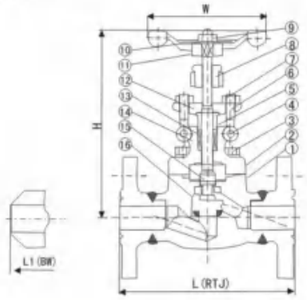

DIMENSIONS(MM)AND WIGHTS(KG)

Path			1/ 2 "	3/ 4 "	1 "	1-1/ 4 "	1-1/ 2 "	2 "
L(RF) L1(BW)	150Lb		108	117	127	140	165	203
	300Lb		152	178	203	216	229	267
	600Lb		165	190	216	229	241	292
H(Open)	150,300Lb		166	171	207	240	258	330
	600Lb		171	207	240	158	330	380
W			100	100	125	160	160	180
Weight	150	RTJ	4.5	6.9	9.8	13.5	19.5	28.0
		BW	2.3	3.6	7.8	8.2	12.0	15.0
	300	RTJ	4.8	7.7	11.0	16.8	21.2	32.6
		BW	2.8	4.0	8.5	9.2	12.6	16.8
	600	RTJ	5.6	7.8	12.5	17.0	23.5	38.8
		BW	3.4	4.7	9.2	10.5	13.3	18.9

MATERIAL LIST

NO	Part Name	CS to ASTM Type A 105	AS to ASTM Type F22	SS to ASTM Type F304(L)	SS to ASTM Type F316(L)
1	Body	A 105	A182F22	A182F304(L)	A182F316(L)
2	Gasket	Corrugated SS+graphite		SS +PTFE	
3	Cover Bolt	A193 B7	A193 B16	A193 B8	A193 B8M
4	Cylindrical pin	A276 420		A276 304	
5	Packing set	A276 410		A182 F304(L)	A182 F304(L)
6	Articulated bolt	A193 B7	A193 B16	A193 B8	A193 B8M
7	Nut	A194 2H	A194 4	A194 8	A194 8M
8	Stem nut	A276 420			
9	Nut	A194 2H	A194 4	A194 8	A194 8M
10	Nameplate	SS			
11	Handwheel	A 197			
12	Packing pressure plate	A 105		A 182 F304	
13	Packing	Flexible Graphite		PTFE	
14	Cover	A 105N	A182F22	A182F304(L)	A182F316(L)
15	Stem	A182 F6a	A182 F304	A276 304(L)	A182 316L)
16	Disc	A276 420	A276 304	A276 304(L)	A276 316(L)
Suitable Medium		W.O.G.etc		HNO_3,CH_3OOHetc	
Suitable Temperature		-29℃~425℃	-29℃~550℃	-29℃~180℃	

Note:Other materials are available upon request. CS=Carbon Steel AS=Alloy Steel SS=Stainless Steel;

API FORGED STEEL FLANGE GLOBE VALVE

900LB~1500LB



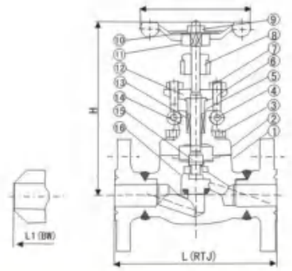

DIMENSIONS(MM)AND WIGHTS(KG)

Path		1/ 2 "	3/ 4 "	1 "	1-1/ 4 "	1-1/ 2 "	2 "
L(RTJ)	900-1500Lb	216	229	254	279	305	371
L1(BW)	900-1500Lb	216	229	254	279	305	368
H(Open)		207	207	240	258	330	355
W		125	125	160	160	180	200
Weight	RTJ	8.0	13.2	17.4	19.0	24.5	31.0
	BW	5.2	10.0	14.6	15.8	20.5	27.8

MATERIAL LIST

NO	Part Name	CS to ASTM Type A 105	AS to ASTM Type F22	SS to ASTM Type F304(L)	SS to ASTM Type F316(L)
1	Body	A 105	A182F22	A182F304(L)	A182F316(L)
2	Gasket	Corrugated SS+graphite		SS +PTFE	
3	Cover Bolt	A193 B7	A193 B16	A193 B8	A193 B8M
4	Cylindrical pin	A276 420		A276 304	
5	Packing set	A276 410		A182 F304(L)	A182 F304(L)
6	Articulated bolt	A193 B7	A193 B16	A193 B8	A193 B8M
7	Nut	A194 2H	A194 4	A194 8	A194 8M
8	Stem nut	A276 420			
9	Nut	A194 2H	A194 4	A194 8	A194 8M
10	Nameplate	SS			
11	Handwheel	A 197			
12	Packing pressure plate	A 105		A 182 F304	
13	Packing	Flexible Graphite		PTFE	
14	Cover	A 105N	A182F22	A182F304(L)	A182 F316(L)
15	Stem	A182 F6a	A182 F304	A182F 304(L)	A182 F316(L)
16	Disc	A276 420	A276 304	A276 304(L)	A276 316(L)
Suitable Medium		W.O.G.etc		HNO_3,CH_3OOHetc	
Suitable Temperature		-29℃~425℃	-29℃~550℃	-29℃~180℃	

Note:Other materials are available upon request. CS=Carbon Steel AS=Alloy Steel SS=Stainless Steel;

API FORGED STEEL LIFT CHECK VALVE

800LB



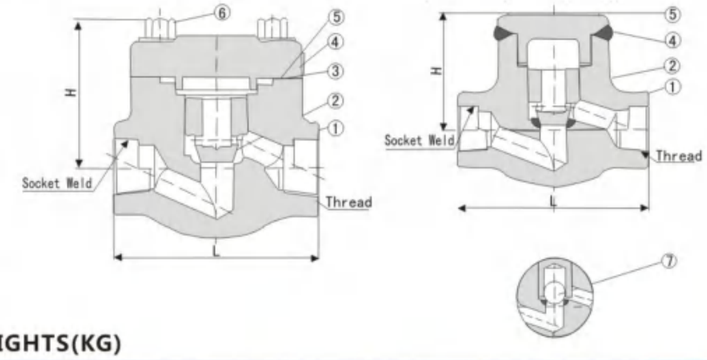

DIMENSIONS(MM)AND WIGHTS(KG)

Path	reducing	3/8 "	1/ 2 "	3/ 4 "	1 "	1-1/ 4 "	1-1/ 2 "	2 "	/
	Full	/	3/8 "	1/ 2 "	3/ 4 "	1 "	1-1/ 4 "	1-1/ 2 "	2 "
L		79	79	92	111	120	152	172	200
H		61	61	65	79	95	103	118	132
Weight	Bolted	1.4	1.2	1.5	3.1	3.9	5.6	8.9	12.5
	Welded	1.1	1.0	1.2	2.9	3.3	4.9	8.1	10.9

MATERIAL LIST

NO.	Part Name	CS to ASTM	AS to ASTM	SS to ASTM	
		Type A 105	Type F22	Type F304(L)	Type F316(L)
1	Body	A 105	A182F22	A182F304(L)	A182F316(L)
2	Piston Disc	A276 420	A276 304	A276 304(L)	A276 316(L)
3	Gasket	Corrugated SS+graphite		SS +PTFE	
4	Bonnet	A105	A182 F22	A182 F304(L)	A182 F316(L)
5	Nameplate	SS			
6	Bolt	A 193 B7	A 193 B16	A 193 B8(M)	A 193 B8(M)
7	Ball	A182 F420/STL	A182 F304	A182 F304	A182 F304
Suitable Medium		W.O.G.etc		HNO_3,CH_3OOHetc	
Suitable Temperature		-29℃~425℃	-29℃~550℃	-29℃~180℃	

Note:Other materials are available upon request. CS=Carbon Steel AS=Alloy Steel SS=Stainless Steel;

API FORGED STEEL LIFT CHECK VALVE

900LB~1500LB



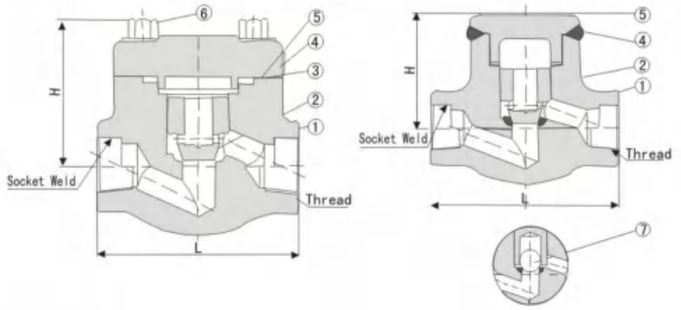

DIMENSIONS(MM)AND WIGHTS(KG)

Path	reducing	3/8 "	1/ 2 "	3/ 4 "	1 "	1-1/ 4 "	1-1/ 2 "	2 "	/
	Full	/	3/8 "	1/ 2 "	3/ 4 "	1 "	1-1/ 4 "	1-1/ 2 "	2 "
L		92	111	111	120	152	172	200	220
H		65	79	79	97	104	120	139	215
Weight	Bolted	1.6	3.4	3.3	5.5	6.0	9.2	12.9	16.2
	Welded	1.3	3.2	3.1	4.8	5.4	8.5	11.2	14.3

MATERIAL LIST

NO.	Part Name	CS to ASTM	AS to ASTM	SS to ASTM	
		Type A 105	Type F22	Type F304(L)	Type F316(L)
1	Body	A 105	A182F22	A182F304(L)	A182F316(L)
2	Piston Disc	A276 420	A276 304	A276 304(L)	A276 316(L)
3	Gasket	Corrugated SS+graphite		SS +PTFE	
4	Bonnet	A105	A182 F22	A182 F304(L)	A182 F316(L)
5	Nameplate	SS			
6	Bolt	A 193 B7	A 193 B16	A 193 B8(M)	A 193 B8(M)
7	Ball	A182 F420	A182 F304	A182 F304	A182 F304
Suitable Medium		W.O.G.etc		HNO_3,CH_3OOHetc	
Suitable Temperature		-29℃~425℃	-29℃~550℃	-29℃~180℃	

Note:Other materials are available upon request. CS=Carbon Steel AS=Alloy Steel SS=Stainless Steel;

API FORGED STEEL FLANGE END CHECK VALVE

150LB~1500LB



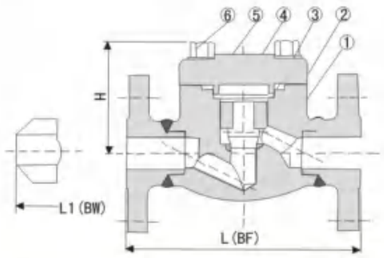

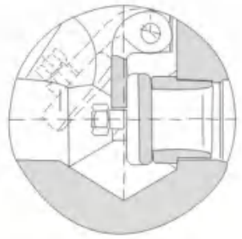

DIMENSIONS(MM)AND WIGHTS(KG)

NPS			1/ 2 "	3/ 4 "	1 "	1-1/ 4 "	1-1/ 2 "	2 "
L(RF) L1(BW)	150		108	117	127	140	165	203
	300		152	178	203	216	229	267
	600		165	190	216	229	241	292
	900		216	229	254	279	305	371
	1500		216	229	254	279	305	368
H	150,300		61	61	79	95	103	118
	600		61	79	95	103	118	135
	900,1500		79	79	95	104	120	138
Werghts	150	RTJ	2.56	3.37	4.37	8.17	8.94	12.64
		BW	1.70	1.90	2.10	5.12	5.50	7.89
	300	RTJ	2.73	3.65	4.74	8.77	9.60	13.70
		BW	1.90	2.10	3.00	5.12	6.60	7.85
	600	RTJ	3.00	4.00	5.83	9.47	10.10	15.6
		BW	2.00	3.12	4.25	7.25	8.56	13.60
	900	RTJ	8.5	10.5	15.7	20.8	27.2	33.0
		BW	6.4	8.0	13.2	17.8	24.2	29.7
	1500	RTJ	8.5	10.5	15.7	20.8	27.2	33.0
		BW	6.4	8.0	13.2	17.8	24.2	29.7

MATERIAL LIST

NO	Part Name	CS to ASTM Type A 105	AS to ASTM Type F22	SS to ASTM Type F304(L)	SS to ASTM Type F316(L)
1	Body	A 105	A182 F22	A182 F304(L)	A182 F316(L)
2	Nameplate	SS			
3	Piston Disc	A276 420	A276 304	A276 304(L)	A276 316(L)
4	Bonnet	A 105	A182 F22	A182 F304(L)	A182 F316(L)
5	Gasket	Corrugated SS+graphite		SS +PTFE	
6	Bonnet Bolt	A 193 B7	A193 B16	A193 B8M	A193 B8M
Suitable Medium		W.O.G.etc		HNO_3,CH_3OOHetc	
Suitable Temperature		-29℃~425℃	-29℃~550℃	-29℃~180℃	

Note:Other materials are available upon request. CS=Carbon Steel AS=Alloy Steel SS=Stainless Steel;

SOCKET HIGH PRESSURE PIPE FITTINGS SERIES

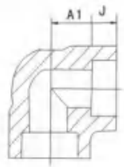

90°Elbow

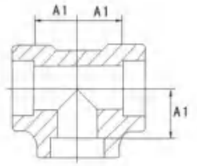

Tee

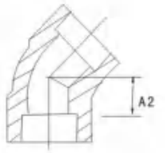

45°Elbow

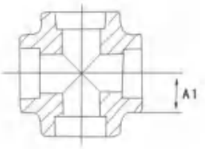

Cross

SOCKET WELDING PIPE FITTINGE
GB/T14383、HGJ10、SHJ410、ASME1316.11、JIS132316

公称通径 (NPS)DN mm	in	Jmin	A1 3000Lb Sch80	A1 6000Lb Sch160	A1 9000Lb XXS	A2 3000Lb Sch80	A2 6000Lb Sch160	A2 9000Lb XXS	A3 3000Lb Sch80	A3 6000Lb Sch160	A4 3000Lb Sch80	A4 6000Lb Sch160
6	1/8	10	11	11	-	8	8	-	-	-	-	-
8	1/4	10	11	15	-	8	8	-	-	-	-	-
10	3/8	10	13	15	-	8	12	-	-	-	-	-
15	1/2	10	16	19	25	11	13	16	41	51	11	13
20	3/4	13	19	22	28	13	14	18	51	60	13	14
25	1	13	22	27	32	14	18	22	60	71	14	18
32	11/4	13	27	32	35	18	21	22	71	81	18	21
40	11/2	13	32	38	38	21	25	25	81	98	21	25
50	2	16	38	41	41	25	29	29	98	120	25	29
65	21/2	16	41	57	-	29	32	-	-	-	-	-
80	3	16	57	64	-	32	35	-	-	-	-	-
100	4	19	66	-	-	42	-	-	-	-	-	-

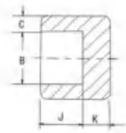

Cap

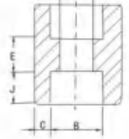

Coupling

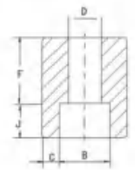

HA1F--Coupling

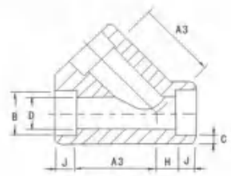

45°Lateral

SOCKET WELDING PIPE FITTINGS
GB/T14383、HGJ10、SHJ410、ASME1316.11、JIS132316

公称通径 (NPS)DN mm	in	J	D	F	K 3000Lb Sch80	K 6000Lb Sch160	K 9000Lb XXS
6	1/8	10	6	16	5	6.5	-
8	1/4	10	6	16	5	6.5	-
10	3/8	10	6	17.5	5	6.5	-
15	1/2	10	10	22.5	6.5	8	11
20	3/4	13	10	23.5	6.5	8	12.5
25	1	13	13	29	9.5	11	14
32	11/4	13	13	30	9.5	11	14
40	11/2	13	13	32	11	12.5	16
50	2	16	19	41	12	16	19
65	21/2	16	19	42.5	16	19	-
80	3	16	19	44.5	19	22	-
100	4	19	19	47.5	22	28.5	-

SOCKET WELDING REDUCING PIPE FITTINGS

公称通径 (NPS) DN mm	in
20×15	3/4×1/2
25×20	1×3/4
25×15	1×1/2
32×25	11/4×1
32×20	11/4×3/4
32×15	11/4×1/2
40×32	11/2×11/4
40×25	11/2×1
40×20	11/2×3/4

公称通径 (NPS) DN mm	in
50×40	2×11/2
50×32	2×11/4
50×25	2×1
65×50	21/2×2
65×40	21/2×11/2
65×32	21/2×11/4
80×65	3×21/2
80×50	3×2
80×40	3×11/2

Note:Other materials are available upon request. CS=Carbon Steel AS=Alloy Steel SS=Stainless Steel;

SOCKET HIGH PRESSURE PIPE FITTINGS SERIES

MSS SP-79 REDUSCING SONNECTOR
GB/T14383、HGJ10、SHJ410、ASME1316.11、JIS132316

公称通径 (IN)DN	型式 Type	3000 D	d2	A	L
1/2×3/8	1	21.6	11	24	20
1/2×1/4	2	21.6	7.5	15.5	-
1/2×1/8	3	21.6	5.5	15.5	7
3/4×1/2	1	26.9	14	27	22
3/4×3/8	2	26.9	11	15.5	-
3/4×1/4	3	26.9	7.5	15.5	7
3/4×1/8	3	26.9	5.5	15.5	7
1×3/4	1	33.6	19	28.5	23
1×1/2	2	33.6	14	24	*
1×3/8	3	33.6	11	28	7
1×1/4	3	33.6	7.5	24	7
1×1/41	1	42.4	24.5	31.5	24
11/4×3/4	2	42.4	19	22	5
11/4×1/2	3	42.4	14	24.5	-
11/2×11/4	1	48.5	32.5	33.5	7
11/2×1	2	48.5	24.5	33.5	27
11/2×3/4	3	48.5	19	22	-
11/2×1/2	3	48.5	14	26	8
2×11/2	2	60.9	38	27	7
2×11/4	3	60.9	32.5	25.5	-
2×1	3	60.9	24.5	25.5	8
2×3/4	3	60.9	19	25.5	8
2×1/2	3	60.9	14	29.5	8
21/2×2	1	73.6	49	41.5	7
21/2×11/2	3	73.6	38	27.5	30
21/2×11/4	3	73.6	32.5	29.5	8
21/2×1	3	73.6	24.5	29.5	8
3×21/2	1	89.6	59	46	8
3×2	3	89.6	49	41.5	33
3×11/2	3	89.6	38	42	5
3×11/4	3	89.6	32.5	42.5	10
3×1	3	89.6	24.5	39	8

公称通径 (IN)DN	型式 Type	3000 D	d2	A	L
1/2×3/8	1	21.6	11	30	21
3/4×1/2	1	26.9	12	33.5	23
3/4×3/8	2	26.9	11	25.5	-
1×3/4	1	33.6	15.5	42	26
1×1/2	1	33.6	12	40	24
1×3/8	3	33.6	311	28.5	7
1×1/41	1	42.4	20.5	43	28
11/4×3/4	1	42.4	15.5	43	28
11/4×1/2	2	42.4	12	32	-
11/4×3/8	3	42.4	11	32.5	7
11/2×11/4	1	48.5	29.5	51	32
11/2×3/4	1	48.5	20.5	49	28
11/2×1/2	2	48.5	15.5	35	-
11/2×1/2	3	48.5	12	39	78
2×11/2	1	60.9	34	46	34
2×11/4	1	60.9	29.5	47.5	34
2×1	3	60.9	20.5	36	8
2×3/4	3	60.9	15.5	36	8
2×1/2	3	60.9	12	39	7
21/2×2	1	73.6	43	54	36
21/2×11/2	2	73.6	34	47.5	8
21/2×11/4	3	73.6	29.5	42	8
21/2×1	3	73.6	20.5	44	8
21/2×3/4	3	73.6	15.5	44	8
21/2×1/2	3	73.6	12	46.5	7
3×21/2	1	89.6	54	63.5	38
3×2	2	89.6	43	54	-
3×11/2	3	89.6	34	47.5	8
3×11/4	3	89.6	29.5	49.6	8
3×1	3	89.6	20.5	48.5	8

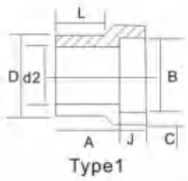

Type1



Type2

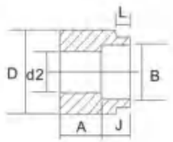

Type3

MSS SP-79 REDUSCING SONNECTOR
GB/T14383、HGJ10、SHJ410、ASME1316.11、JIS132316

公称通径 (NPS) DN		3000Lb 80 Socket welded					3000Lb Threaded				
mm	In	L	N	D		Jmin	L	N	D	Dmin	
6	1/8	41.4	37.7	21.8		9.6	41.4	37.7	14.7	6.43	
8	1/4	41.4	37.7	21.8		9.6	41.4	37.7	19.0	9.45	
10	3/8	46	42.9	25.9		9.6	46	42.9	22.9	12.51	
15	1/2	49	49.2	31.2		9.6	49	49.2	27.7	17.07	
20	3/4	56.9	60.3	37.1		12.7	56.9	60.3	33.5	21.39	
25	1	62	69.5	45.5		12.7	62	69.5	41.5	27.74	
32	11/4	71.1	85.3	54.9		12.7	71.1	85.3	50.5	35.36	
40	11/2	76.5	94.5	61.5		12.7	76.5	94.5	57.2	41.20	
50	2	86.1	112.3	75.2		15.8	86.1	112.3	70.1	52.21	
65	21/2	102.4	133	91.7		15.8	102.4	133	85.3	64.31	
80	3	109	156.4	1		1	109	156.4	10	77.27	

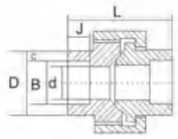

Socket welding joint

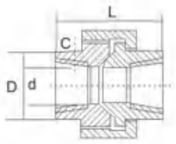

Threaded Union

Note:Other materials are available upon request. CS=Carbon Steel AS=Alloy Steel SS=Stainless Steel;

SOCKET HIGH PRESSURE PIPE FITTINGS SERIES

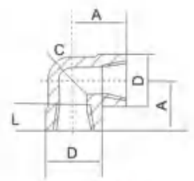

90°E1bow

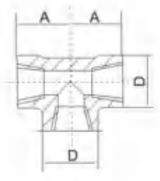

Tee

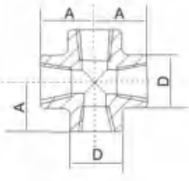

Cross

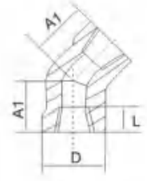

45°Elbow

THREADED PIPE FITTINGS

公称通径 (NPS) DN		A			A1			D			Cmin			Lmin	
mm	in	2000LB Sch80	3000LB Sch160	6000LB XXS	2000LB Sch80	3000LB Sch160	6000LB XXS	2000LB Sch80	3000LB Sch160	6000LB XXS	2000LB Sch80	3000LB Sch160	6000LB XXS	NPT	RC
6	1/8	21	21	25	17	17	19	22	22	25	3.0	3.0	6.5	6.5	6.5
8	1/4	21	25	29	17	17	22	22	25	33	3.0	3.5	6.5	10.0	9.7
10	3/8	25	29	33	19	22	25	25	33	38	3.0	3.5	7.0	10.5	10.1
15	1/2	29	33	38	22	25	29	33	38	46	3.0	4.0	8.0	13.5	13.2
20	3/4	33	38	44	25	29	33	38	46	56	3.0	4.5	8.5	14.0	14.5
25	1	38	44	51	29	33	35	46	56	62	3.5	5.0	10.0	17.5	16.8
(32)	11/4	44	51	60	33	35	43	56	62	75	4.0	5.5	10.5	18.0	19.1
40	11/2	51	60	64	35	43	44	62	75	84	4.0	5.5	11.0	18.5	19.1
50	2	60	64	83	43	45	52	75	84	102	4.5	7.0	12.0	19.0	23.4
(65)	21/2	76	83	95	52	52	64	92	102	121	5.5	7.5	15.5	29.0	26.7
80	3	86	95	106	64	64	79	110	121	146	6.0	9.0	16.5	30.5	29.8
100	4	106	114	114	79	79	79	146	152	152	6.5	11.0	18.5	33.0	35.8

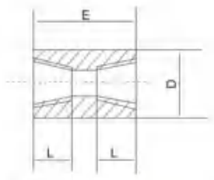

Double interface coupling



Single interface coupling

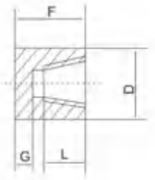

Pipe cap

THREADED PIPE FITTINGS

公称通径 (NPS) DN		E		F		D		G min		L min	
mm	in	3000LB Sch160	6000LB XXS	3000LB Sch160	6000LB XXS	3000LB Sch160	6000LB XXS	3000LB Sch160	6000LB XXS	NPT	RC
6	1/8	32		19	-	16	22	5.0	-	6.5	6.5
8	1/4	35		25	27	19	25	5.0	6.5	10.0	9.7
10	3/8	38		25	27	22	32	5.0	6.5	10.5	10.1
15	1/2	48		32	33	29	38	6.5	8.0	13.5	13.2
20	3/4	51		37	38	35	44	6.5	8.0	14.0	14.5
25	1	60		41	43	44	57	9.5	11.0	17.5	16.8
(32)	11/4	67		44	46	57	64	9.5	11.0	18.0	19.1
40	11/2	79		44	48	64	76	11.0	12.5	18.5	19.1
50	2	83		48	51	76	92	12.0	16.0	19.0	23.4
(65)	21/2	92		60	64	92	108	16.0	19.0	29.0	26.7
80	3	108		65	68	108	127	19.0	22.0	30.5	29.8
100	4	121		68	75	140	159	22.0	28.5	33.0	35.8

Note:Other materials are available upon request. CS=Carbon Steel AS=Alloy Steel SS=Stainless Steel;

SOCKET HIGH PRESSURE PIPE FITTINGS SERIES

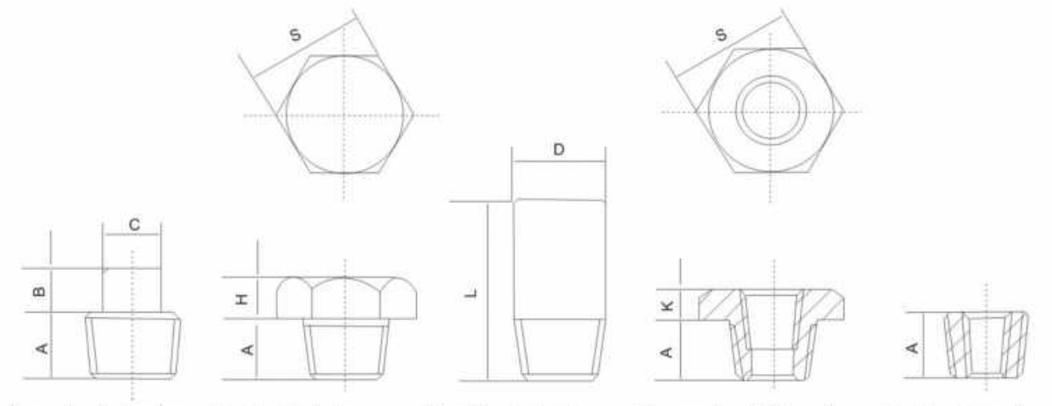

Square head pipe plug | Hex pipe head plug | Round head pipe plug | Hexagon head of internal and external thread joint | Headless internal and external thread joint

THREADED PIPE FITTINGS

mm

公称通径 (NPS) DN		A min	B min	C min	L min	S	K min	H min
mm	in							
6	1/8	6	6	6	6	6	6	6
8	1/ 4	6	6	6	6	6	6	6
10	3/8	12.5	8	11.0	41	17.5	4	8
15	1/ 2	14.5	10	14.5	44	22.0	5	8
20	3/ 4	16.0	11	16.0	44	27.0	6	10
25	1	19.0	13	20.5	51	35.0	6	10
(32)	11/4	20.5	14	24.0	51	44.5	7	14
40	11/2	20.5	16	28.5	51	51.0	8	16
50	2	22.0	17	33.5	64	63.5	9	17
(65)	21/2	27.0	19	38.0	70	76.0	10	19
80	3	28.5	21	43.0	70	89.0	10	21
100	4	32.0	25	63.5	76	117.5	13	25

Note:Other materials are available upon request. CS=Carbon Steel AS=Alloy Steel SS=Stainless Steel;

ANSI VALVE
INOXCN
FOCUS ON STAINLESS STEEL

ANSI VALVE
INOXCN
FOCUS ON STAINLESS STEEL