


LONZ

浙江隆成阀门有限公司
ZHEJIANG LONZE VALVE CO.,LTD

总部地址：浙江省温州市瓯北镇五星工业园
Headquarters Address：Wuxing Industrial Park, Oubei Town, Wenzhou, Zhejiang
电话/Tel：86-577-67372252 67372253 67372257 67372258
传真/Fax：86-577-67372256

分部地址：浙江省温州市瓯北镇东方工业区7号
Division Address：No.7, Dongfang Industrial Zone, Oubei Town, Wenzhou, Zhejiang
电话/Tel：86-577-67352112 67353112 67369631
传真/Fax：86-577-67361825

网址/Web：http://www.lonzvalve.com 邮编/ Postal code ：325105
企业邮箱/E-mail：lonz@lonzvalve.com



© **隆成阀门** 版权所有，翻版必究；
! 若有改动，恕不通知。请用户使用最新版本，**隆成阀门** 拥有最终解释权；
◎ 因版面有限，欲要了解更多产品信息，请来电咨询！

© Zhe jiang Lonze Ualue.,LTD All Rights Reserved
! Changes of products will not make additional notice.Final interpretation is owned by Zhejiang Lonze Ualue Co.,LTD.
◎ The space of the paper is limited Welcome to call us to get more information of products



策划 | 印刷 0577-57668028 13968979718


阀门科技 隆成演绎
LONZ

蒸汽系统节能专家
Steam System Energy-Saving Expert

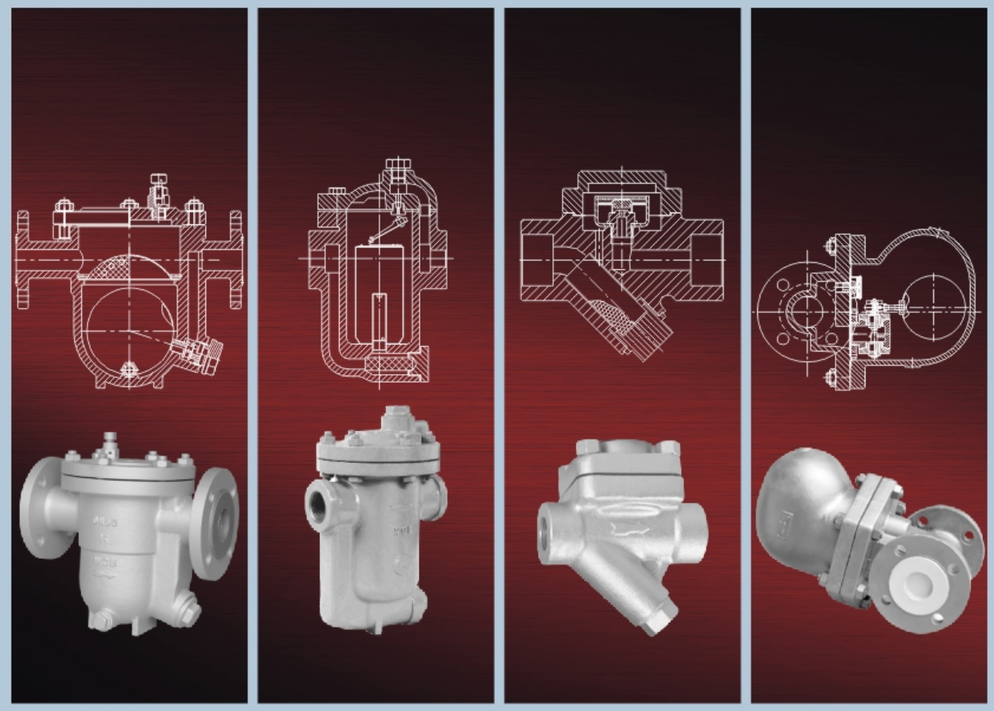

# 疏水阀选型样本
SELECTION MANUAL
FOR STEAM TRAP

浙江隆成阀门有限公司
ZHEJIANG LONZE VALVE CO.,LTD

Http://www.lonzvalve.com

LONZ

阀门科技 隆成演绎

Valve technology lonze deduce

**十多年来，**

我们一直朝着一个方向前行

有了您的支持

我们才得以将日臻澎湃的豪情和卓越的产品不断奉献...

展望未来

隆成人激情高昂

隆成精神将继续渗透在与众不同的创新产品和服务之中

并以新的形象、新的姿态

活跃于阀门领域...

**Over ten years,**

we have kept moving forward.

With your support,

we will be devoted to offer excellent products with continuously surge of proud.

Looking forward to the future,

Lonz is inspired.

Lonz spirit will continuously permeate into the distinctive innovative products and services,

and will be active in the field of valves

with new images and status.







## ≫ 企业简介

浙江隆成阀门有限公司座落于著名的“中国泵阀之乡”温州市瓯北镇五星工业园。公司建立于1989年，是中国石油天燃气集团公司一级供应网成员，中国化工装备总公司定点生产企业，中国城市燃气协会会员单位。厂区占地4500m$^2$，建筑面积3400m$^2$。是集研制、开发、生产、销售、售后服务于一体的专业化阀门企业。

公司拥有先进的机械加工设备，设有数控加工、焊接、热处理、装配、测试等工作区，拥有蒸汽疏水阀、锻钢阀、美标阀车间。公司主导产品：自由浮球式疏水阀、热动力式疏水阀、倒吊桶式疏水阀、高温高压式疏水阀、可调双金属片式疏水阀、杠杆浮球式疏水阀及闸阀、截止阀、止回阀、美标阀、德标阀、锻钢阀系列产品。产品可按美标（API、ANSI）；日标(JIS、JPI)；国标（GB、HG、JB）等多个标准生产。数年来本公司生产的各类阀门广泛应用于石油、石化、电力、冶金、化工、制药、造纸、食品等领域，深受用户的信赖。公司生产的各类阀门先后被授予了“中国知名阀门十佳品牌”“中国质量过硬服务放心信誉品牌”等多项荣誉。

近年来我公司引进多名专业技术人员，并备有阀门设计研发和阀门质量检测。具备完善的质量体系，公司通过了ISO9001：2008国际质量体系认证、美国石油学会API6D认证，欧共体CE认证，中华人民共和国特种设备制造许可证认证（TS）。

隆成阀门以卓越的品质在全国各地享有声誉，企业始终遵循“以质量求信誉、以先进赢客户”的经营宗旨，以更求实的精神，更优质的产品，更完善的服务去开创一个现代化的企业。

## ≫ Company profile

Zhejiang Lonze Valve Co.,ltd is located in well-known China Pump & Valve hometown Five-Star-Industrial Zone, Oubei Town, Wenzhou City. The company, established in 1989, belongs to Chemical Industry Equipment Corporation, and the member of China City Gas Association. The company covers an area of 4500 square meters and the construction area is 3400square meters. It has become a valve company which integrates researching, manufacturing, designing, sales and after services as a specialized unit.

The company has advanced machine equipment, owns workshops for numerical control, heat treatment, jointing, assembling, testing etc. We also own the workshops for the steam trap, forged valves and API valves etc. Our major products are Free-ball float steam trap, Thermodynamic steam trap, Inverted bucket steam trap, High temperature & pressure disc type steam trap and Adjustable bimetal steam trap, Lever ball float steam trap and gate valve, globe valve, check valve, and din valve etc. The company can produce “American Standard “ANSI”,“Japanese Standard” JIS,“Chinese Standard” GB valve. The valves manufactured by our company are widely applicable to the fields of petroleum, chemical industry, power industry, metallurgy, pharmacy paper making and food with good reputation and reliability from users. It was successively acknowledged as “China well-known valve brand top ten” and “China top quality & best-service brand”.

Recently, our company has brought in several professional technique members, established advanced valve R&D center and modern valve, quality-test center and possessed complete quality system that was authorized by ISO90001:2008, the United States institute of petroleum API6D certification, the European Union CE certification, the People's Republic of China special equipment manufacture license (TS).

Lonz is famous for its excellent quality in China. The Corporation insists on the target “excellent quality gains glory, advance wins clients” to create a modern corporation with factualist spirit, better quality and consummate services.

**每一份荣誉都来至**
**阀门领域专业人士对隆成的肯定。**

Each honor has come from the affirmation on Lonz
from professionals in the filed of valves.



金杯、奖状，回眸隆成一个辉煌的过去，
也预示隆成一个金灿灿的未来。
但是隆成坚信的是辛勤、孜孜以求与不懈地努力，
努力，再努力...
Golden cups and diplomas present glorious past of
Lonz and also indicate a bright future. However,
Lonz still believes in hard working, sweat, unwearied
and unremitting striving.
We will strive to work harder and harder.

多年来，
隆成人以自己辛勤的汗水获得了众多的荣誉，
博得了广大消费者和同行的认可，
在以后的征程中，
隆成人将再接再厉，再创辉煌。
Over the years,
Lonz gains numerous honors with arduous sweat and
recognition from vast consumers and peer companies.
In the following joinery,
Lonz will make persistent efforts to continuously
create refulgence.

LONZ 隆成阀门

# 企业资质
## Enterprise qualification




































LONZ
隆成阀门

先进的设备，一流的品质
Adranced Equipment Top-Ranking Quality

LONZ VALVE















## ADVANCED PROCESSING EQUIPMENT, RELIABLE QUALITY GUARANTEE

## ≫ 先进的加工设备，可靠的质量保证

隆成精良先进的生产装备，运用崭新的工业概念及强大的技术力量，生产出符合国际标准的高品质终端产品，从而加快了企业的产业化速度。无论是产品原材料的选择还是产品的出厂检验，我们均一丝不苟地按照国际标准严格把关，使出厂产品合格率保持在100%，真正确保产品的卓越品质。

LONZ is armed with advanced production equipment and is applied with industrial concept and strong technical force to produce high quality goods with international standard, which thus speeds up the industrialization of enterprise. Our company selects raw material and carries out the delivery inspection strictly according to the international standard to guarantee the 100% qualified rate and ensure the quality of the products.









LONZ 隆成阀门

# 产品应用

## PRODUCT APPLICATION

**广泛应用于石油、化工、冶金、电力、造纸、印染等行业**

**Widely used in petroleum, chemical industry, metallurgy, electric power, papermaking, printing, dyeing, etc**











LONZ 隆成阀门

# Product Contents

# 产品目录


| | |
|---|---|
| 产品集锦 Products Collection | 01–02 |
| 自由浮球式疏水阀 Free Floating Ball Type Steam Trap | 03–05 |
| 热动力(圆盘)式疏水阀 Thermodynamic Disc Steam Trap | 06–07 |
| 膜盒式疏水阀 Sylphon Type Steam Trap | 08 |
| 可调双金属片式疏水阀 Adjustable Bimetal Strip Type Steam Trap | 09 |
| 双金属片式疏水阀 Bimetal Strip Type Steam Trap | 10–11 |
| 双金属式疏水阀 The Bimetal Type Steam Traps | 12 |
| 可调恒温式疏水阀 Adjustable Constant Temperature Type Steam Trap | 13 |
| 自由半浮球式疏水阀 Free Semi Ball Float Type Steam Trap | 14 |
| 钟型浮子(倒吊桶)式疏水阀 Bell Shape Float（Inverse Bucket）type Steam Trap | 15–16 |
| 高压倒置桶式疏水阀 High pressure inverted bucket type steam trap | 17–18 |
| 倒置桶式疏水阀 Inverted Bucket Steam Trap | 19 |
| 高温高压式疏水阀 High-temperature/-pressure Disc Type Steam Trap | 20–21 |
| 杠杆浮球式疏水阀 Lever Ball Float Type Steam Trap | 22–24 |
| 高压杆杠浮球式疏水阀 High Leverage Ball Float Trap | 25 |
| 波纹管式疏水阀 Bellow Type Steam Trap | 26 |
| 汽水分离器 Water separator | 27 |
| 过滤器 Filter | 28 |


CS41H


CS11H


LFT44


LFT44


LFT14


LTB6.LTB11(CS17H)

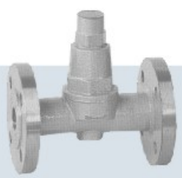
LTB11F LTB6F(CS47H)


LTB5F(CS47H)


CS47H(BK)


BKCS17H


NEW TYPE BK


CS14F

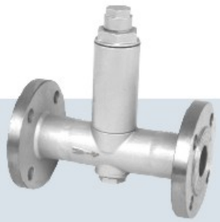
CS44H

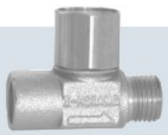
SL3-A


LTD42 CS19H


STB






CS16H


CS46H


SER120


STC


L883


L884F


SER25


SER105F


ES8N(CS15H)


ES8BF(CS45H)


CS15H


CS41H(立式)


LGS8


SF-2/3(CS17H)


LHR150A LHR260A


HRW150


HRF150


LS7汽水分离器


丝扣过滤器


法兰过滤器



CS11H

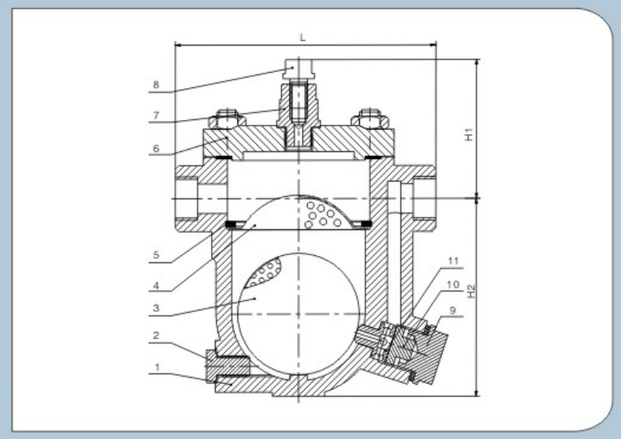


## 工作原理 Working principle

本产品根据浮力的原理，使阀体内的浮球随水位变化做升降运动，以达到阀门启闭，即排水阻汽的作用。

According to the principle of buoyancy, this product makes the ball in the valve body up and down with the change of water level, so as to open or close the valve, which works as draining the water and preventing the steam.

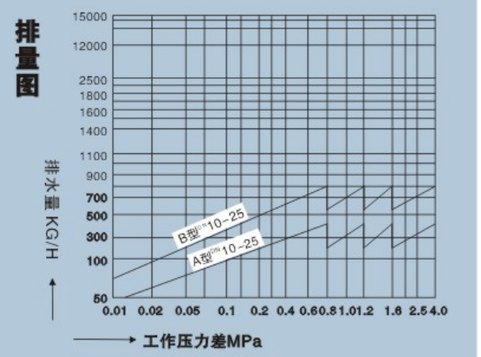


## 结构特点 Structure characteristics

1、能连续排水、性能稳定、排水量大、漏气量少。
2、能连续饱和水，致使设备凝结水滞存量较少、升温快、加热温度稳定。
3、有自动排冷空气装置，无气锁现象，工作平衡无噪音。

1.It can drain water continuously and perform in a stable way with large capacity and less steam loss.
2.It can saturate the water continuously, which makes less stock of condensation water in the equipment and is quick in heating and stable in heating temperature.
3.It has automatic cold air vent device without air lock situation. It works in balanced way without noisy.

## 外形参数 Specification

| 产品型号 Product model | 口径Size(DN) | 连接方式 Connection Type | 最高允许温度℃ Max.allowable temp.℃ | 阀体材质 Meterial of valve body | 尺寸dimension | | | | |
|---|---|---|---|---|---|---|---|---|---|
| | | | | | L | L加长 Lengthened | H1 | H2 | W |
| 16C CS11H-25C-A 40C | 15-20 | 内螺纹ZG1/2"~3/4" Internal Thread | 350 | WCB | 120 | | 82 | 89 | 84 |
| | 25 | 内螺纹ZG1" Internal Thread | 350 | WCB | 120 | | 84 | 95 | 84 |
| 16C CS11H-25C-B 40C | 15~20 | 内螺纹ZG1/2"~3/4" Internal Thread | 350 | WCB | 150 | | 84 | 114 | 110 |
| | 25 | 内螺纹ZG1" Internal Thread | 350 | WCB | 150 | | 86.5 | 116.5 | 114 |
| | 32-40 | 内螺纹ZG1 1/4"~1 1/2" Internal Thread | 350 | WCB | 155 | | 98.5 | 104.5 | 114 |
| | 50 | 内螺纹ZG2" Internal Thread | 350 | WCB | 210 | | 98.5 | 104.5 | 114 |
| CS11H-64-B | 15-32 | 1 1/2"~1 1/4" | 350-450 | WCB、WC6 | 175 | | 90 | 120 | |







CS41H

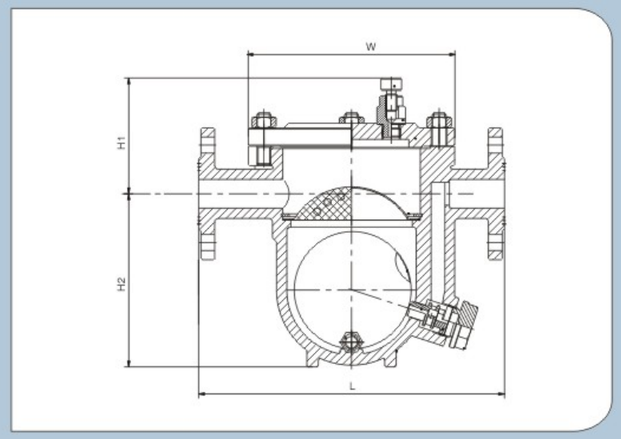


## 工作原理 Working principle

本产品根据浮力的原理，使阀体内的浮球随水位变化做升降运动，以达到阀门启闭，即排水阻汽的作用。

According to the principle of buoyancy, this product makes the ball in the valve body up and down with the change of water level, so as to open or close the valve, which works as draining the water and preventing the steam.

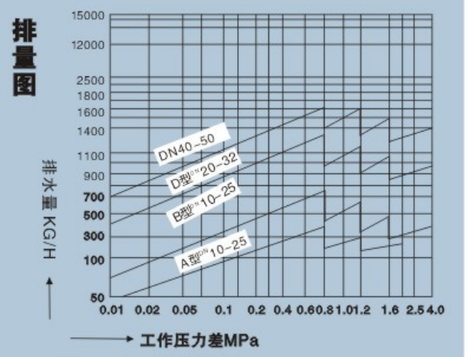


## 结构特点 Structure characteristics

1、能连续排水、性能稳定、排水量大、漏气量少。
2、能连续饱和水，致使设备凝结水滞存量较少、升温快、加热温度稳定。
3、有自动排冷空气装置，无气锁现象，工作平衡无噪音。

1.It can drain water continuously and perform in a stable way with large capacity and less steam loss.
2.It can saturate the water continuously, which makes less stock of condensation water in the equipment and is quick in heating and stable in heating temperature.
3.It has automatic cold air vent device without air lock situation. It works in balanced way without noisy.

## 外形参数 Specification

| 产品型号 Product model | 口径Size(DN) | 连接方式 Connection Type | 最高允许温度℃ Max.allowable temp.℃ | 阀体材质 Meterial of valve body | 尺寸dimension | | | | |
|---|---|---|---|---|---|---|---|---|---|
| | | | | | L | L加长 Lengthened | H1 | H2 | W |
| 16C CS41H-25C-B 40C | 15 | 法兰Flange | 350 | WCB | 195 | 210 | 94.5 | 107 | 132 |
| | 20 | 法兰Flange | 350 | WCB | 195 | 210 | 97 | 104.5 | 132 |
| | 25 | 法兰Flange | 350 | WCB | 215 | 230 | 101.5 | 111.5 | 140 |
| CS11H-64-B | 15-25 | 法兰Flange | 350 | WCB | 250 | | 115 | 105 | |
| | 32-50 | 法兰Flange | 350 | WCB | 350 | | 120 | 210 | |
| 16C CS41H-25C-D 40C | 25 | 法兰Flange | 350 | WCB | 270 | | 102.5 | 151 | 180 |
| | 32 | 法兰Flange | 350 | WCB | 270 | 280 | 109 | 154.5 | 180 |
| | 40 | 法兰Flange | 350 | WCB | 280 | | 112 | 170 | 184 |
| | 50 | 法兰Flange | 350 | WCB | 290 | 320 | 117 | 175 | 195 |

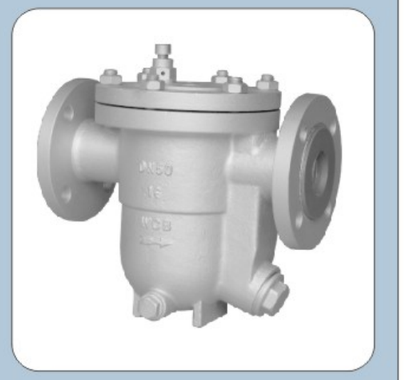

CS41H

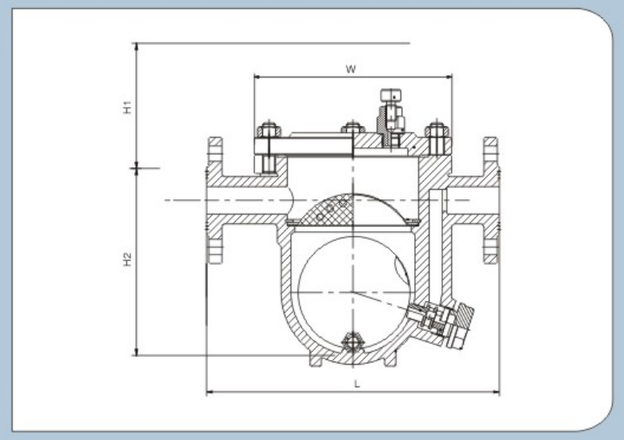


## 工作原理 Working principle

本产品根据浮力的原理，使阀体内的浮球随水位变化做升降运动，以达到阀门启闭，即排水阻汽的作用。

According to the principle of buoyancy, this product makes the ball in the valve body up and down with the change of water level, so as to open or close the valve, which works as draining the water and preventing the steam.

## 结构特点 Structure characteristics

1、能连续排水、性能稳定、排水量大、漏气量少。
2、能连续饱和水，致使设备凝结水滞存量较少、升温快、加热温度稳定。
3、有自动排冷空气装置，无气锁现象，工作平衡无噪音。

1.It can drain water continuously and perform in a stable way with large capacity and less steam loss.
2.It can saturate the water continuously, which makes less stock of condensation water in the equipment and is quick in heating and stable in heating temperature.
3.It has automatic cold air vent device without air lock situation. It works in balanced way without noisy.

排量图

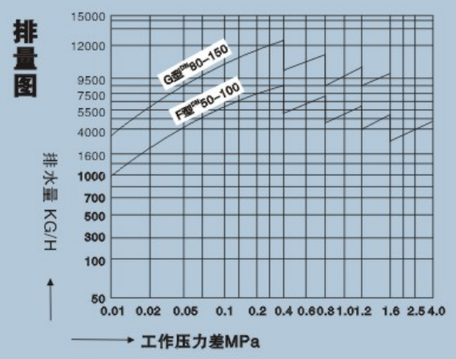


## 外形参数 Specification

| 产品型号 Product model | 口径Size(DN) | 连接方式 Connection Type | 最高允许温度℃ Max.allowable temp.℃ | 阀体材质 Meterial of valve body | 尺寸dimension | | | | |
|---|---|---|---|---|---|---|---|---|---|
| | | | | | L | L加长 Lengthened | H1 | H2 | W |
| 16C CS41H–25C –F 40C | 50 | 法兰Flange | 350 | WCB | 410 | | 132 | 129 | 270 |
| | 65 | 法兰Flange | 350 | WCB | 410 | 430 | 139.5 | 136.5 | 270 |
| | 80 | 法兰Flange | 350 | WCB | 430 | 460 | 148 | 313 | 275 |
| | 100 | 法兰Flange | 350 | WCB | 430 | 460 | 158 | 323 | 280 |
| 16C CS41H– 25C–G 40C | 80 | 法兰Flange | 350 | WCB | 550 | | 147 | 331 | 335 |
| | 100 | 法兰Flange | 350 | WCB | 550 | | 147 | 331 | 335 |
| | 125 | 法兰Flange | 350 | WCB | 550 | | 169.5 | 353.5 | 335 |
| | 150 | 法兰Flange | 350 | WCB | 550 | | 169.5 | 353.5 | 335 |





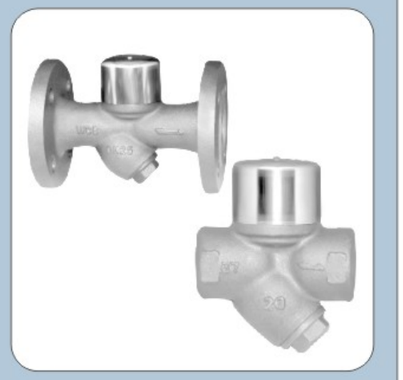

CS49H CS19H

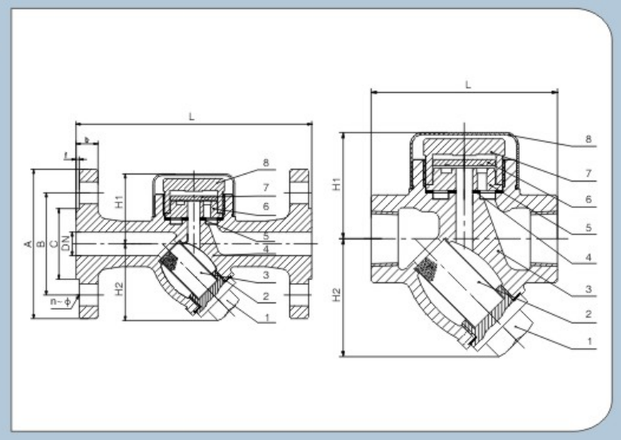


## 结构特点 Structure characteristics

1、带蒸汽或空气保温装置，不受环境湿度影响，减少动作频率，延长寿命。
2、备有过滤网和排污阀。
3、该阀运作灵敏可靠，排水量大。

1.It has the steam or air thermal insulation device, which will not be affected by the environmental humidity. It reduces the frequency of motion and lengthens the lifetime.
2.It is equipped with filter and drain valve.
3.It is sensitive and reliable in operation with large capacity.

## 工作原理 Working principle

热动力式疏水阀是通过一个可上下移动的阀片进行工作的。阀片顶起，冷凝水可顺利排出；而蒸汽进入后，阀片则紧紧闭合。

Thermodynamics steam trap works by moving valve block ups and downs. When the valve block is jacked up, the condensation water will be drained out. And when the steam gets into it, the valve block will close tightly.

排量图

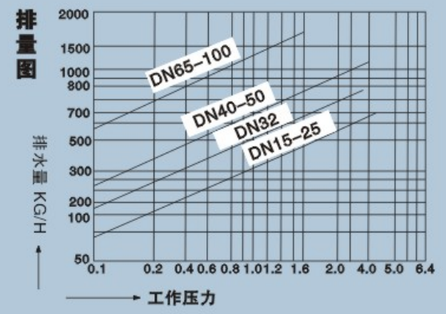


## 主要用途 Main application

本阀门适用于蒸汽管路及蒸汽设备上，起到阻止蒸汽泄漏，排除凝结水的作用，从而达到节能和防止水锤现象及其可能引起的故障。

This type of steam trap is suitable for steam piping and steam equipment. It can prevent the leakage of steam and drain condensation water, which thus can save energy and prevent water hammer situation and the trouble caused by it.

## 外形参数 Specification

| 产品型号 Product model | 口径 Size(DN) | 连接方式 Connection Type | 最高允许温度℃ Max.allowable temp.℃ | 阀体材质 Meterial of valve body | 尺寸dimension | | | |
|---|---|---|---|---|---|---|---|---|
| | | | | | L | H1 | H2 | W |
| Y型 CS49H–16C | 15 | 法兰Flange | 350 | WCB | 150 | 55 | 50 | 61 |
| | 20 | 法兰Flange | 350 | WCB | 150 | 55 | 58 | 61 |
| | 25 | 法兰Flange | 350 | WCB | 160 | 58 | 62 | 61 |
| | 32 | 法兰Flange | 350 | WCB | 210 | 71 | 80 | 79 |
| | 40 | 法兰Flange | 350 | WCB | 230 | 75 | 90 | 79 |
| | 50 | 法兰Flange | 350 | WCB | 230 | 85 | 105 | 79 |
| 直通式 CS49H–16C | 65 | 法兰Flange | 350 | WCB | 280 | 100 | 82 | 85 |
| | 80 | 法兰Flange | 350 | WCB | 310 | 118 | 92 | 110 |
| | 100 | 法兰Flange | 350 | WCB | 310 | 128 | 102 | 110 |

| 产品型号 Product model | 口径 Size(DN) | 连接方式 Connection Type | 最高允许温度℃ Max.allowable temp.℃ | 阀体材质 Meterial of valve body | 尺寸dimension | | | |
|---|---|---|---|---|---|---|---|---|
| | | | | | L | H1 | H2 | W |
| CS19H–16C | 内螺纹1/2" Internal Thread | 15 | 350 | WCB | 80 | 55 | 50 | 61 |
| | 内螺纹3/4" Internal Thread | 20 | 350 | WCB | 90 | 55 | 58 | 61 |
| | 内螺纹1" Internal Thread | 25 | 350 | WCB | 95 | 58 | 62 | 61 |
| | 内螺纹1 1/4" Internal Thread | 32 | 350 | WCB | 130 | 71 | 80 | 79 |
| | 内螺纹1 1/2" Internal Thread | 40 | 350 | WCB | 130 | 75 | 90 | 79 |
| | 内螺纹2" Internal Thread | 50 | 350 | WCB | 150 | 85 | 105 | 79 |
| CS69H–16C | | 15 | 350 | WCB | 80 | 55 | 50 | 61 |
| | 承插焊 Socket welded | 20 | 350 | WCB | 90 | 55 | 58 | 61 |
| | 承插焊 Socket welded | 25 | 350 | WCB | 95 | 58 | 62 | 61 |
| | 承插焊 Socket welded | 32 | 350 | WCB | 130 | 71 | 80 | 79 |
| | 承插焊 Socket welded | 40 | 350 | WCB | 130 | 75 | 90 | 79 |
| | 承插焊 Socket welded | 50 | 350 | WCB | 150 | 85 | 105 | 79 |

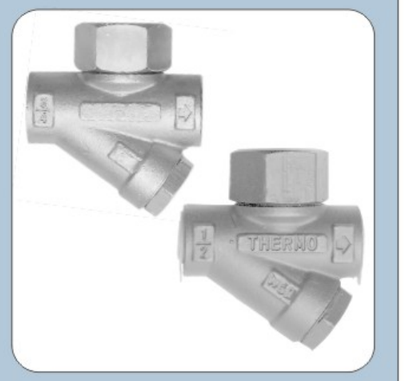

TD42(CS19)

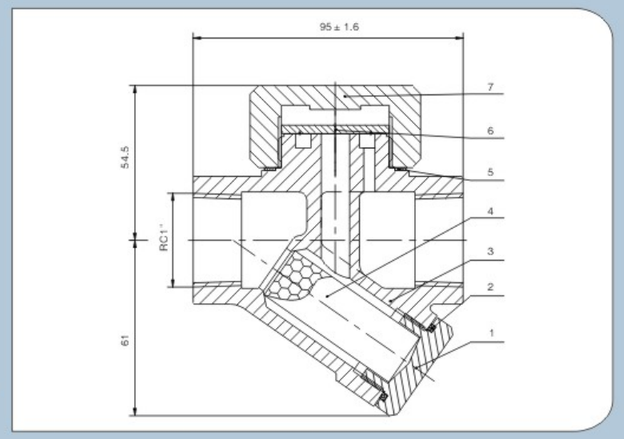


## 结构特点 Structure characteristics

1、带蒸汽或空气保温装置，不受环境湿度影响，减少动作频率，延长寿命。
2、备有过滤网和排污阀。
3、该阀运作灵敏可靠，排水量大。

1.It has the steam or air thermal insulation device, which will not be affected by the environmental humidity. It reduces the frequency of motion and lengthens the lifetime.
2.It is equipped with filter and drain valve.
3.It is sensitive and reliable in operation with large capacity.

## 工作原理 Working principle

本疏水阀是利用热动力学特性，当凝结水排到较低压力区时会发生二次蒸发，并在粘度、密度等方面与蒸汽存在差异驱动启闭件。

Thermodynamics steam trap works by moving valve block ups and downs. When the valve block is jacked up, the condensation water will be drained out. And when the steam gets into it, the valve block will close tightly.

## 主要用途 Main application

本阀门适用于蒸汽管路及蒸汽设备上，起到阻止蒸汽泄漏，排除凝结水的作用，从而达到节能和防止水锤现象及其可能引起的故障。

This type of steam trap is suitable for steam piping and steam equipment. It can prevent the leakage of steam and drain condensation water, which thus can save energy and prevent water hammer situation and the trouble caused by it.

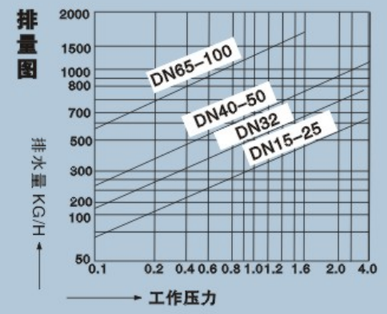


## 外形参数 Specification

| 产品型号 Product model | 口径 Size(DN) | 连接方式 Connection Type | 最高允许温度℃ Max.allowable temp.℃ | 阀体材质 Meterial of valve body | 尺寸dimension L | H1 | H2 | W |
|---|---|---|---|---|---|---|---|---|
| TD42F (CS49) | 15 | 法兰Flange | 350 | WCB | 150 | 47 | 54 | 61 |
| | 20 | 法兰Flange | 350 | WCB | 150 | 52 | 59 | 61 |
| | 25 | 法兰Flange | 350 | WCB | 160 | 59 | 62 | 61 |
| | – | – | – | – | – | – | – | – |
| | – | – | – | – | – | – | – | – |
| | – | – | – | – | – | – | – | – |

| 产品型号 Product model | 口径 Size(DN) | 连接方式 Connection Type | 最高允许温度℃ Max.allowable temp.℃ | 阀体材质 Meterial of valve body | 尺寸dimension L | H1 | H2 | W |
|---|---|---|---|---|---|---|---|---|
| TD42 (CS19/CS69) | 内螺纹1/2" Internal Thread | 15 | 350 | WCB | 80 | 47 | 54 | 47 |
| | 内螺纹3/4" Internal Thread | 20 | 350 | WCB | 90 | 52 | 59 | 57 |
| | 内螺纹1" Internal Thread | 25 | 350 | WCB | 95 | 59 | 62 | 57 |
| | 承插焊 Socket welded | 15 | 350 | WCB | 80 | 47 | 54 | 47 |
| | 承插焊 Socket welded | 20 | 350 | WCB | 90 | 52 | 59 | 57 |
| | 承插焊 Socket welded | 25 | 350 | WCB | 95 | 59 | 62 | 57 |





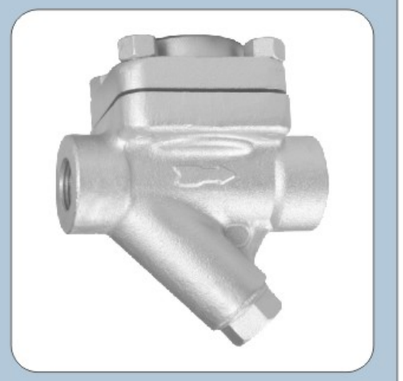

CS16H

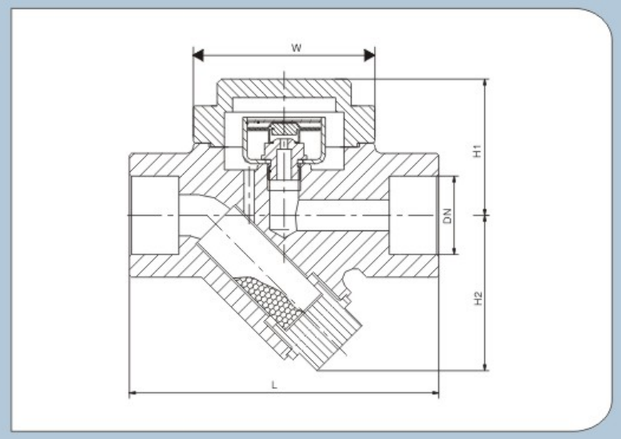


## 结构特点 Structure characteristics

1、出色的排空气能力，可耐过热的蒸汽和水锤。
2、在压力范围内都是具有固定过冷的循环操作。
3、阀内装膜盒，有单组、双组、多组。适用于大排量场合。
4、感温元件，耐蚀性强，使本阀寿命经久耐用。
5、本体有碳钢不锈钢两种，小型轻量，立式安装效果最佳，亦可任意角度安装。

1.It is excellent in air discharge capacity, and is resistant to overheating steam and water hammer.
2.It has a certain circled operation when the temperature is too low during a certain scale of pressure.
3.The valve body is loaded with sylphon, which can be one single unit, or double units, or even multi units. It can also be applied into the occasions which requires for large discharge capacity.
4.It is equipped with temperature-sensing element and is strong in corrosion resistance, which makes the valves much durable in service.
5.The valve body can be WCB or Stainless steel with small size and light weight. Vertical installation will show the best performance of valves, while they can also be installed in any angle.

## 工作原理 Working principle

该系列热静力疏水阀是通过一个可热胀冷缩的焊接不锈钢热静力原件（膜盒）进行工作的。当空气和冷凝液进入到阀体，阀处于开启状态；而当蒸汽进入阀体后，热静力元件膨胀紧紧关闭疏水阀。

This type of thermostatic steam traps works by the welded stainless steel thermostatic element expanding with heat and contracting with cold. When the air and condensation water is getting into the valve body, the valve is in the "open" status. And after they have gotten into it, the thermostatic element will expand and close the steam trap tightly.

## 主要用途 Main application

膜盒式疏水阀适用范围广泛，包括供热汽主管线、伴热管路、干燥器和工业加热蒸汽设备系统。

Sylphon type steam trap is widely applied in hot steam main line, steam-traced pipe, dryer and industrial heating steam equipment system and so on.

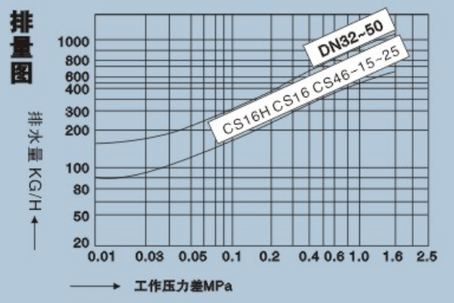


## 外形参数 Specification

| 产品型号 Product model | 口径Caliber(DN) | 连接方式 Connection Type | 适用压力MPa Appropriate pressure | 最高允许温度℃ Max.allowable temp.℃ | 阀体材质 Meterial of valve body | 尺寸dimension L | H1 | H2 | W |
|---|---|---|---|---|---|---|---|---|---|
| CS16H-16C | 15~20 | 内螺纹 Internal Thread | 0.01~1.6 | 250 | WCB | 100 | 58 | 55 | 70 |
| | 25 | 内螺纹 Internal Thread | 0.01~1.6 | 250 | WCB | 120 | 58 | 55 | 70 |
| | 32~40 | 内螺纹 Internal Thread | 0.01~1.6 | 250 | WCB | 150 | 68 | 68 | 90 |
| | 50 | 内螺纹 Internal Thread | 0.01~1.6 | 250 | WCB | 160 | 68 | 68 | 90 |
| CS46H-16C | 15~20 | 法兰Flange | 0.01~1.6 | 250 | WCB | 150 | 58 | 55 | 70 |
| | 25 | 法兰Flange | 0.01~1.6 | 250 | WCB | 160 | 58 | 55 | 70 |
| CS46H-16C | 32~50 | 法兰Flange | 0.01~1.6 | 250 | WCB | 230 | 85 | 60 | 120 |

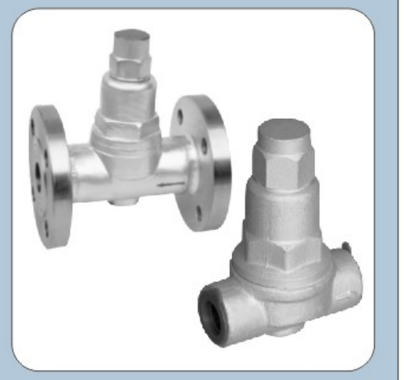

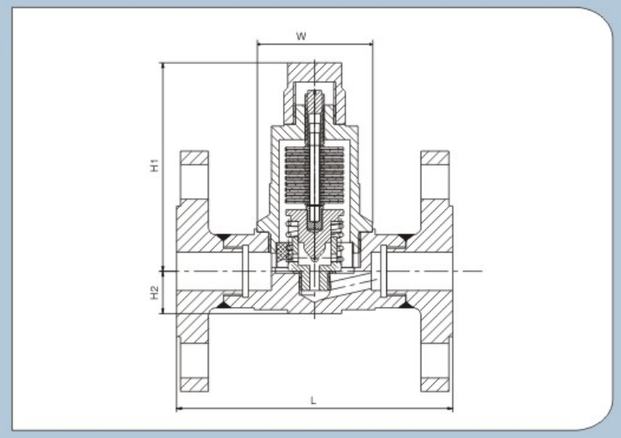


**CS17H**
**TB6F TB11F**

## 结构特点 Structure characteristics

1、新型SCCV关闭系统设计，关闭可靠，寿命长久。
2、排放温度可调整，有效地利用高温凝结水中的湿热，节能效果显著。
3、排放温度在管网运行时就可进行，并可任意角度安装。
4、阀前始终存有高温凝结水，形成可靠的水封，无蒸汽泄漏。
5、抗水击。排空气性能优良。
6、动作时无噪声，有利于保护环境。
7、通气初始，阀门全部开启，低温冷凝水和空气迅速排除，大大缩短设备启动时间。
8、内部零件全部用不锈钢制造，抗腐蚀、汽蚀。

1.The new SCCV closing system is reliable in design and serves in a long lifetime.
2.The discharge temperature can be adjusted to save energy by taking the advantage of hot and humid condition in high temperature condensation water.
3.It can be installed in any angle.
4.There has always been high temperature condensation water upstream, which will form reliable water seal without any leakage of steam
5.It has excellent abilities to resist water beating and to discharge water.
6.Its operation will not cause any noise. Thus, it is preferable to the environment.
7.The valve is completely open when the steam firstly comes. The low temperature condensation water and air can be discharged rapidly, which largely shortens the start time of equipment.
8.All the internal parts are made of stainless steel, which is resistant to corrosion and cavitation erosion.

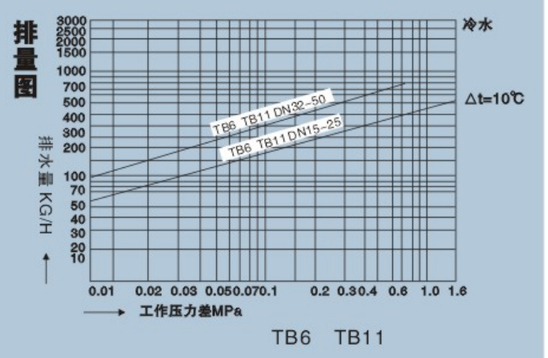


TB6 TB11

## 外形参数 Specification

| 产品型号 Product model | 公称通径DN Nominal diameter | 连接方式 Connection Type | 使用压力范围(Mpa) Applicable pressure range | 最高允许温度℃ Max.allowable temp.℃ | 调整温度范围℃ Adjusting temperature range | 阀体材质 Meterial of valve body | 外型尺寸External dimension(mm) | | | |
|---|---|---|---|---|---|---|---|---|---|---|
| | | | | | | | L | H1 | H2 | W |
| LTB6 (CS17H-16C) | 15~25 | 内螺纹ZG1/2"~1 Internal Thread | 0.01~1.6 | 220 | 80~180 | A105(25) | 95 | 115 | 29 | 60 |
| LTB6F (CS47H-16C) | 15~20<br>25 | 法兰Flange | 0.01~1.6 | 220 | 80~180 | A105(25) | 150<br>160 | 111 | 23<br>26 | 60 |
| | 32 | 法兰Flange | 0.01~1.6 | 220 | 80~180 | A105(25) | 210 | 118 | 27 | 61 |
| | 40~50 | 法兰Flange | 0.01~1.6 | 220 | 80~180 | A105(25) | 230 | 123 | 30 | 66 |
| LI-B6W (CS67H-16C) | 15~20<br>25 | 承插焊 Socket welded | 0.01~1.6 | 220 | 80~180 | A105(25) | 95<br>95 | 106 | 35 | 58 |
| LTB11 (CS17H-16C) | 15~20<br>25 | 内螺纹ZG1/2"~1 Internal Thread | 0.01~1.6 | 220 | 80~190 | A105(25) | 95<br>95 | 106 | 35 | 58 |
| LTB11F (CS47H-16C) | 15~20<br>25 | 法兰Flange | 0.01~1.6 | 220 | 80~180 | A105(25) | 150<br>160 | 111 | 23<br>26 | 60 |
| | 32 | 法兰Flange | 0.01~1.6 | 220 | 80~180 | A105(25) | 210 | 118 | 27 | 61 |
| | 40~50 | 法兰Flange | 0.01~1.6 | 220 | 80~180 | A105(25) | 230 | 123 | 30 | 66 |





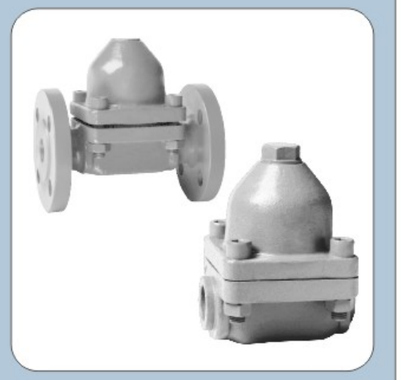

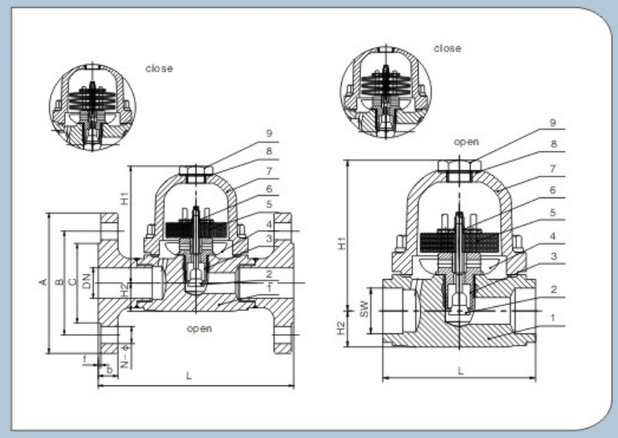


**CS47H CS17H**
**BK174 BK171**

## 结构特点 Structure characteristics

1、本阀采用双金属片的热胀冷缩原理来达到排水阻汽的启闭效果。
2、小型轻量设计，安装方便，而且还可以任意角度安装。
3、设备运行初期，空气和冷凝水能迅速排出，无汽锁现象。
4、灵敏的感应，能迅速排水，没有噪音，抗腐蚀性强。

1.This type of steam trap is applied with bimetal strip which expands with heat and contracts with cold in order to drain water and prevent steam.
2.This steam trap is small in size and light in weight. With easy installation, it can be installed in any angle.
3.The air and condensation water can be discharged rapidly during the initial operation of valves without any air lock situation.
4.It is sensitive in induction, and can drain water without any noise, which is also very strong in resistance to corrosion.

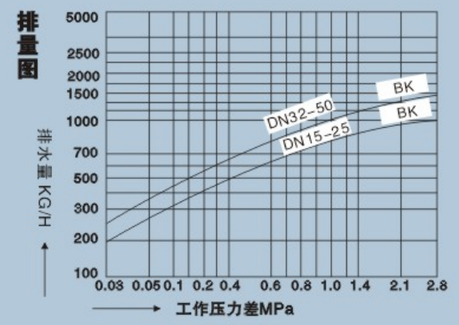


## 主要用途 Main application

双金属疏水阀可用于电站、石油、化工、造纸、轻纺、冶金等各种工业蒸汽加热系统。本阀能自动排放蒸汽加热系统中的凝结水，保证系统在节省能源的条件下高效率地工作。

Bimetal strip steam trap can be applied in the filed of power station, petroleum, chemical industry, paper making, textile, metallurgical and other industrial steam heating system. This type of steam trap can automatically discharge condensation water from steam heating system to keep the system working efficiently on saving energy.

## 外形参数 Specification

| 产品型号 Product model | 口径Size(DN) | 连接方式 Connection Type | 最高允许温度℃ Max.allowable temp.℃ | 阀体材质 Meterial of valve body | 尺寸dimension | | | |
|---|---|---|---|---|---|---|---|---|
| | | | | | L | H1 | H2 | W |
| 16C CS47H-25C BK型 40C (Type) | 15~20 | 法兰Flange | 220 | A105 | 150 | 100 | 22.0 | 85 |
| | 25 | 法兰Flange | 220 | A105 | 160 | 100 | 22.0 | 85 |
| | 32 | 法兰Flange | 220 | A105 | 210 | 140 | 39 | – |
| | 40~50 | 法兰Flange | 220 | A105 | 230 | 140 | 39 | – |
| 16C CS17H-25C BK型 40C (Type) | 15~25 | 内螺纹1/2"~1"Internal Thread | 220 | A105 | 95 | 100 | 22.0 | 85 |
| | 32~40 | 内螺纹1 1/4"~1 1/2"Internal Thread | 220 | A105 | 150 | 150 | 39 | – |
| | 50 | 内螺纹2"Internal Thread | 220 | A105 | 160 | 160 | 39 | – |
| 16C CS67H-25C BK型 40C (Type) | 15~25 | 承插焊 Socket welded | 220 | A105 | 95 | 100 | 22.0 | 85 |
| | 32~40 | 承插焊 Socket welded | 220 | A105 | 150 | 150 | 39 | – |
| | 50 | 承插焊 Socket welded | 220 | A105 | 160 | 160 | 39 | – |



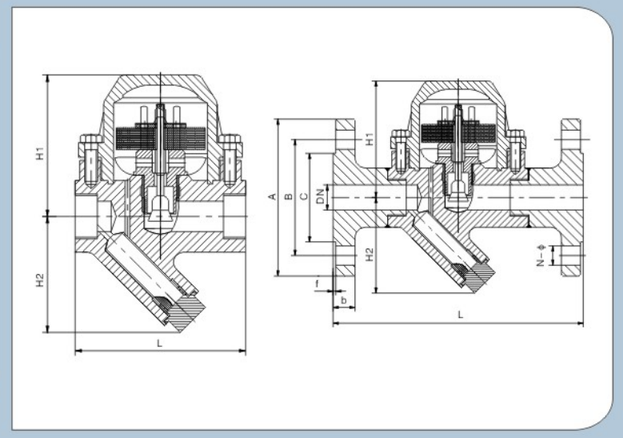


新型BK New BK

## 应用 Application

1、设计标准：JB/T9093-1999

2、结构长度：GB/T12250-2005

3、测试标准：GB/T12251-2005

4、连接：NPT/RF

5、最高工作压力：350℃

1、Basic Design:JB/T9093-1999

2、Face To Face Dimensions:GB/T12250-2005

3、Test Standard:GB/T12251-2005

4、Connection Type: NPT/RF

5、MAX.Working Temperature :350℃

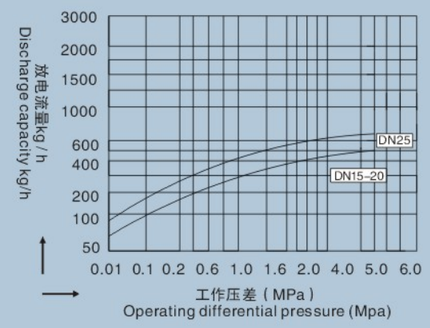


## 外形参数 Specification

| 产品型号 Product model | 尺寸 Size | L | H1 | H2 |
|---|---|---|---|---|
| NPT | 1/2" | 95 | 88 | 70 |
| | 3/4" | 95 | 88 | 70 |
| | 1" | 95 | 88 | 70 |
| RF | 1/2" | 150 | 88 | 70 |
| | 3/4" | 150 | 88 | 70 |
| | 1" | 160 | 88 | 70 |





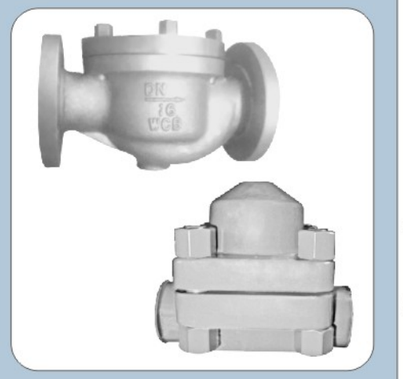

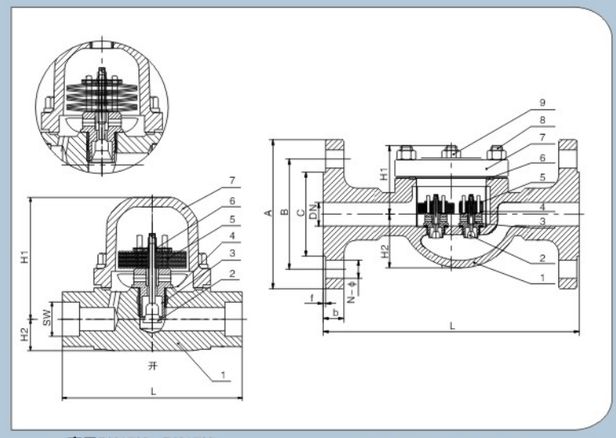


BK47 BK17

高压BK67H、BK17H
High pressure
BK67H、BK17HBK67H、BK17H

群组大排量BK47型
Group large capacitg BK47 type

## 技术要求 Technical Requirement

1、设计制造按GB/T22654-2008的规定。

2、结构长度，标志按GB/T12250-2005的规定。

3、试验与检验按GB/T12251 -2005的规定。

4、法兰尺寸标准按ANSI B16.5

1. Basic Design: GB/T22654-2008

2. Face to face dimensions: GB/T 12250-2005

3. Test and inspection: GB/T 12251-2005

4. Flange Size according to：ANSI B16.5

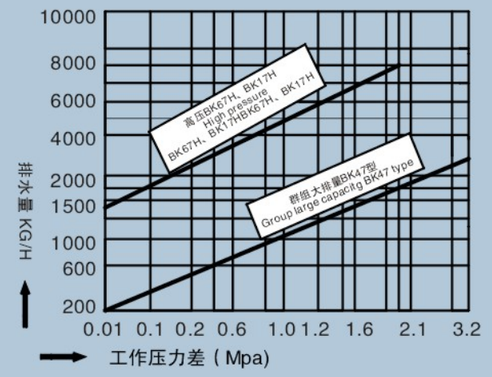


## 外形参数 Specification

| DN | L | H1 | H2 |
|---|---|---|---|
| 15 (高压 High pressure) | 140 | 101 | 26 |
| 20 (高压 High pressure) | 140 | 101 | 26 |
| 25 (高压 High pressure) | 140 | 101 | 26 |
| 65 (大排量 Large capacitg) | 320 | 120 | 105 |
| 80 (大排量 Large capacitg) | 320 | 120 | 105 |
| 100 (大排量 Large capacitg) | 320 | 120 | 105 |



STC STB

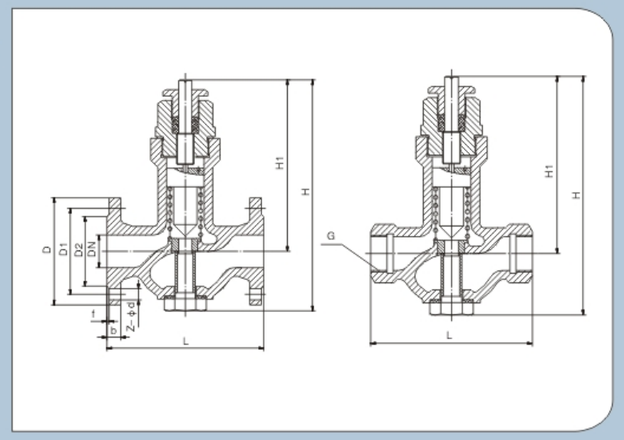


## 结构特点 Structure characteristics

1、本阀采用感温元件的热胀冷缩原理来控制启闭。
2、动作灵敏，排水温度恒定，不受压力影响，节能效果好。
3、能连续排水，无噪音，小型轻量设计，安装方便，而且能任意角度安装。
4、能自动排除空气，无气锁现象，还能调节排水温度。

1.This type of steam trap is applied with temperature-sensing element which expands with heat and contracts with cold in order to open or close the valve.
2.It is sensitive in movement and constant in discharging temperature. It saves energy and will not be affected by pressure.
3.It can drain water successively without any noise. It is small in size and light in weight. With easy installation, it can be installed in any angle.
4.It can exhaust air automatically without any air lock situation. And it can also adjust the discharge temperature.

## 主要用途 Main application

该阀门广泛应用于石油，化工，造纸，医药，食品等蒸汽设备。该阀门亦是伴热管线以及小型热交换器以及供热采暖管线上的最佳选择。

It can be applied in the filed of petroleum, chemical industry, paper making, medicine, food and other steam equipment. It is also an ideal chcice for heat tracing pipeline, and also small sized heat exchanger and heating pipelines.

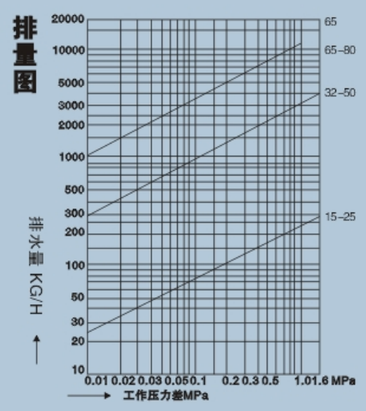


## 外形参数 Specification

| 产品型号 Product model | 口径Size(DN) | 连接方式 Connection Type | 最高允许温度℃ Max.allowable temp.℃ | 阀体材质 Meterial of valve body | 尺寸dimension | | | |
|---|---|---|---|---|---|---|---|---|
| | | | | | L | H | H1 | W |
| STB-16C | 15 | 内螺纹1/2"Internal Thread | 220 | WCB | 90 | 140 | - | - |
| | 20 | 内螺纹3/4"Internal Thread | 220 | WCB | 100 | 145 | - | - |
| | 25 | 内螺纹1"Internal Thread | 220 | WCB | 120 | 158 | - | - |
| | 32 | 内螺纹1 1/4"Internal Thread | 220 | WCB | 130 | 170 | - | - |
| | 40 | 内螺纹1 1/2"Internal Thread | 220 | WCB | 140 | 185 | - | - |
| | 50 | 内螺纹2"Internal Thread | 220 | WCB | 160 | 200 | - | - |
| STC-16C | 15 | 法兰Flange | 220 | WCB | 150 | 175 | - | - |
| | 20 | 法兰Flange | 220 | WCB | 150 | 178 | - | - |
| | 25 | 法兰Flange | 220 | WCB | 160 | 185 | - | - |
| | 32 | 法兰Flange | 220 | WCB | 230 | 200 | - | - |
| | 40～50 | 法兰Flange | 220 | WCB | 230 | 250 | - | - |
| | 65 | 法兰Flange | 220 | WCB | 245 | 280 | - | - |
| | 80 | 法兰Flange | 220 | WCB | 260 | 325 | - | - |
| | 100 | 法兰Flange | 220 | WCB | 310 | 350 | - | - |







CS15H

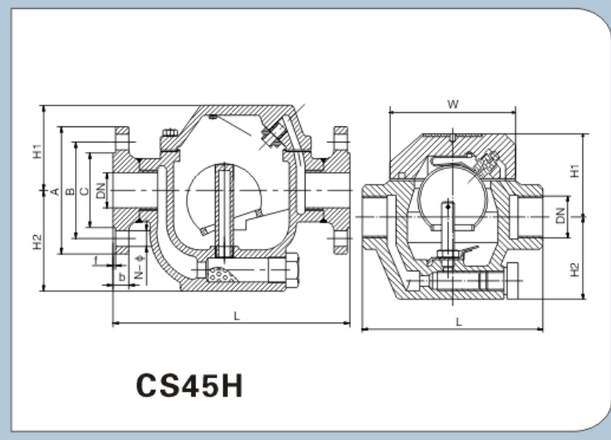


CS45H

## 结构特点及工作原理 Structure and working principle

疏水阀未开始工作时，自由半浮球沉落在发射管上，当疏水阀处于排水状态时，蒸汽经过过滤网和发射管进入阀体，当蒸汽体积增加到一定程度时，浮力使半浮球上浮，在蒸汽压力作用下，半浮球靠向疏水喷咀将其封闭，阻止了蒸汽外溢。当大量凝结水进入阀体时，半浮球内蒸汽体积减少，此半浮球在自身重力作用下下落，半浮球脱离疏水喷咀，完成了一个工作循环。继而周而复始运动，起动自动排水阻汽的目的。

When the steam trap does not work, free semi ball float settles over the transmitting tube. When the steam trap is in the drainage state, the steam will enter into the valve body through filter screen and transmitting tube. When the steam volume increases to a certain degree, the semi ball will float up and move toward and block the nozzle, which prevent the leakage of steam. When a large amount of condensation water enters into the body valve, the steam volume in semi ball float will reduce and it will fall under the action of gravity. The semi ball float will be separated from the nozzle and then a working circle is completed. The steam trap works in cycles to autcmatically drain water and block the air.

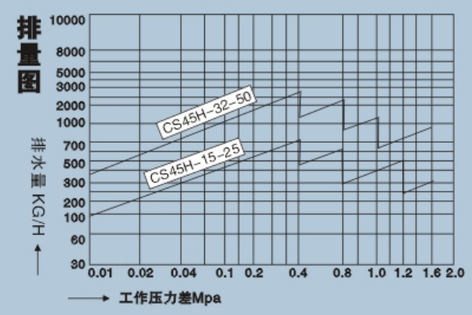


## 主要用途和使用范围 Main application

自由半浮球式蒸汽疏水阀适用于蒸汽供热设备及蒸汽管路上，能自动排除凝结水，阻止蒸汽泄漏，并能自动排除空气。广泛应用于化工，炼油、电力、轻纺、造纸等工矿企业，尤其对压力低、排量大和温度稳定性要求高，不滞存凝结水的蒸汽设备更为适用。

Free Semi ball float steam trap is applied in steam heating supply equipment and steam pipelines to automatically drain condensation water and prevent the leakage of steam and also exhaust the air. It can be widely applied in the field of chemical industry, petroleum refining, electric power, light textile, paper making etc. it is especially applicable for steam equipments which require for low pressure, large capacity and thermal stability and no saving of condensation water.

## 外形参数 Specification

| 产品型号 Product model | 口径Size(DN) | 连接方式 Connection Type | 最高允许温度℃ Max.allowable temp.℃ | 阀体材质 Meterial of valve body | 尺寸dimension | | | |
|---|---|---|---|---|---|---|---|---|
| | | | | | L | H1 | H2 | W |
| CS15H-16C | 15 | 内螺纹1/2"Internal Thread | 350 | WCB | 170 | 75 | 93 | 120 |
| | 20 | 内螺纹3/4"Internal Thread | 350 | WCB | 170 | 75 | 93 | 120 |
| | 25 | 内螺纹1"Internal Thread | 350 | WCB | 170 | 75 | 93 | 120 |
| | 32 | 内螺纹1 1/4"Internal Thread | 350 | WCB | 210 | 95 | 115 | 160 |
| | 40 | 内螺纹1 1/2"Internal Thread | 350 | WCB | 210 | 95 | 115 | 160 |
| | 50 | 内螺纹2"Internal Thread | 350 | WCB | 210 | 95 | 115 | 160 |
| CS45H-16C | 15 | 法兰Flange | 350 | WCB | 230 | 75 | 93 | 120 |
| | 20 | 法兰Flange | 350 | WCB | 230 | 75 | 93 | 120 |
| | 25 | 法兰Flange | 350 | WCB | 230 | 75 | 93 | 120 |
| | 32 | 法兰Flange | 350 | WCB | 270 | 95 | 115 | 160 |
| | 40 | 法兰Flange | 350 | WCB | 270 | 95 | 115 | 160 |
| | 50 | 法兰Flange | 350 | WCB | 270 | 95 | 115 | 160 |
| | 65 | 法兰Flange | 350 | WCB | 380 | 177 | 172 | 290 |



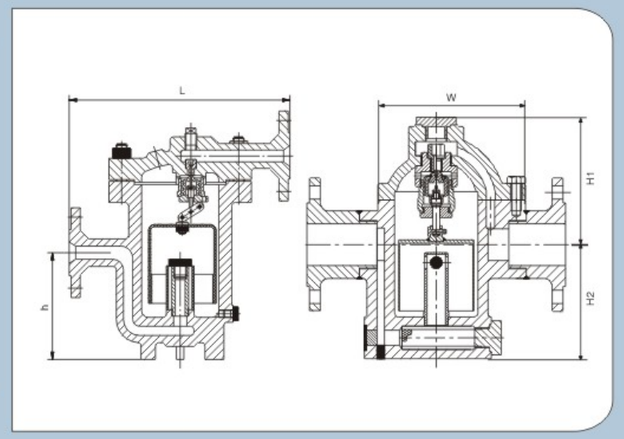


**ER25** ER105F.ER110 ER116.ER120

## 结构特点 Structure characteristics

1、对凝结水的发生量适应性强，既可间歇排放，又可连续排放。
2、内部装有大排量的双阀座差压机构和SCCV关闭系统，体积小而排量大。
3、内部零件全部采用不锈钢制造，并且安装在阀盖上，维修保养极为方便。
4、背压率高。（90%）
5、汽水分离可靠（水汽经u型通道从阀下部进入），阀内始终处于水封状态，有效阻止蒸汽泄漏。
6、敞口形的浮子抗水击。吊桶上设有溢出排气孔，可有效防止蒸汽汽锁、空气气堵现象。（非凝结性的高温空气也可排除）
7、与杠杆机构结合可制成高压阀。

1.It is well adapted to the amount of condensation water, which can discharge water successively or continuously.
2.It is equipped with double seat differential pressure mechanism and SCCV closing system with small size and large capacity.
3.All the internal parts are made of stainless steel and are installed in the bonnet, which is convenient for installation and maintenance.
4.Its rate of back pressure is very high with 90%.
5.It is reliable to separate the steam and water. The water and steam goes into the valve bottom through the "U" type channel. The internal valve is under the water sealed status, which can prevent the leakage of steam.
6.The open type float is resistant to water hammer. There is overflowing air vent in the bucket, which can prevent the situations such as vapor lock and air block.
7.It can also combine with level mechanism to form high pressure valve.




## 外形参数 Specification

| 产品型号 Product model | 公称通径DN Nominal diameter | 连接方式 Connection Type | 使用压力范围（MPa） Applicable pressure range | 最高允许温度℃ Max.allowable temp.℃ | 阀体材质 Meterial of valve body | 尺寸dimension | | | |
|---|---|---|---|---|---|---|---|---|---|
| | | | | | | L | H1 | H2 | W |
| SER105（CS15H–3.7） | 15～50 | 内螺纹ZG1/2"~2" Internal Thread | 0.1~0.3~0.7 | 350 | WCB | 200 | 164 | 135 | 140 |
| SER105F（CS45H–3.7） | 15～25 32～50 | 法兰Flange | 0.01~0.3~0.7 | 350 | WCB | 270 | 164 | 135 | 140 |
| SER110（CS45H–5.12） | 15～25 32～50 | 法兰Flange | 0.01~0.5~1.2 | 350 | WCB | 310 | 164 | 135 | 140 |
| SER116（CS45H–7.16） | 15～25 32～50 | 法兰Flange | 0.01~0.7~1.6 | 350 | WCB | 310 | 164 | 135 | 140 |
| SER120（CS45H–8.16） | 40～80 | 法兰Flange | 0.05~0.8~1.5 | 350 | WCB | 410 | 203 | 192 | 250 |
| SER25（CS45H–25–45–65） | 15～50 | 法兰Flange | 0.05~2.5~4.5~6.5 | 350 | WCB | 380 | 200 | 177 | 250 |
| SER25W（CS65H–21C–45–65） | 15～25 | 承插焊 Socket welded | 0.05~2.5~4.5~6.5 | 350 | WCB | 300 | 200 | 177 | 250 |
| | 32～50 | 承插焊 Socket welded | 0.05~2.5~4.5~6.5 | 350 | WCB | 380 | 200 | 177 | 250 |







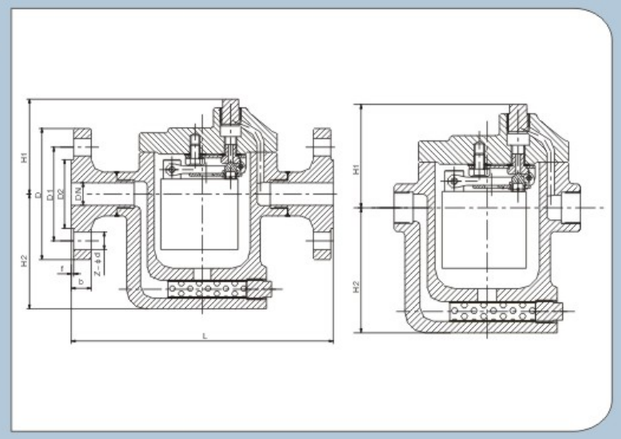


**ES5F.ESH5F ES5.ESH5**
**ES8NF.ES8BF ES8N.ES8B**
**CS45H CS15H**

## 结构特点 Structure characteristics

1、对凝结水的发生量适性强，既可间歇排放，又可连续排放。
2、无与伦比的SCCV关闭系统，独特设计，具有补偿杠杆机构产生的误差，避免关闭时的刚性碰撞，关闭十分可靠，寿命长久。
3、内部零件全部采用不锈钢制造，并且安装在阀盖上，维修保养极为方便。
4、背压率高。(90%)
5、汽水分离可靠（水汽经U型通道从阀下部进入），阀内始终处于水封状态，有效地阻止蒸汽泄露。
6、敞口形的浮子抗水击。吊桶上设有溢出排气孔，可有效防止蒸汽汽锁，空气气堵现象。（非凝结性的高温空气也可排除）

1.It is well adapted to the amount of condensation water, which can discharge water successively or continuously.
2.It is equipped with double seat differential pressure mechanism and SCCV closing system with small size and large capacity.
3.All the internal parts are made of stainless steel and are installed in the bonnet, which is convenient for installation and maintenance.
4.Its rate of back pressure is very high with 90%.
5.It is reliable to separate the steam and water. The water and steam goes into the valve bottom through the "U" type channel. The internal valve is under the water sealed status, which can prevent the leakage of steam.
6.The open type float is resistant to water hammer. There is overflowing air vent in the bucket, which can prevent the situations such as vapor lock and air block.

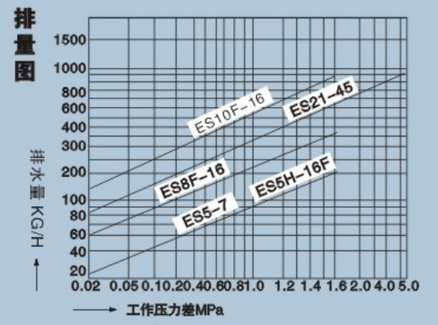


## 耐磨损的SCCV关闭方式

SCCV关闭系统是自动定心，自动关闭系统。该关闭方式突破了传统的设计，巧妙地利用凝结水流传时的吸力和阀内的压力使阀芯关闭。使阀芯在关闭过程中具有缓冲作用，减少了阀芯阀座间的磨损。

SCCV closing system is self–centering, automatic closed system. The closing mode breaks through the traditional design, It ingeniously takes the advantage of the attravtion of condensation water circulating and the pressure in the valve body to close the valve.It plays a part in buffering and reduces abrasion between valve vore and valve seat.

## 外形参数 Specification

| 产品型号 Product model | 公称通径DN Nominal diameter | 连接方式 Connection Type | 使用压力范围（MPa） Applicable pressure range | 最高允许温度℃ Max.allowable temp.℃ | 阀体材质 Meterial of valve body | 尺寸dimension | | | |
|---|---|---|---|---|---|---|---|---|---|
| | | | | | | L | H1 | H2 | W |
| ES5(CS15H–3·7·11·16) | 15～25 | 内螺纹ZG1/2"~1" Internal Thread | 0.01~0.3·0.7·1.1·1.6 | 350 | WCB | 138 | 72 | 94 | 103 |
| ESU5(CS15H–3·7·11·16) | 15～25 | 内螺纹ZG1/2"~1" Internal Thread | 0.01~0.3·0.7·1.1·1.6 | 400 | 1Cr18Ni9Ti | 138 | 72 | 94 | 103 |
| ESU5(CS15H–3·7·11·16) | 15～25 | 法兰Flange | 0.01~0.3·0.7·1.1·1.6 | 400 | 1Cr18Ni9Ti | 210 | 72 | 94 | 103 |
| ES8B(CS15H–5·8·16) | 15～25 | 内螺纹ZG1/2"~1" Internal Thread | 0.01~0.5·0.8·1.6 | 350 | WCB | 138 | 72 | 94 | 103 |
| ES8N(CS15H–5·8·16) | 15～25 | 内螺纹ZG1/2"~1" Internal Thread | 0.01~0.5·0.8·1.6 | 350 | WCB | 138 | 72 | 94 | 103 |
| ES8BF(CS45H–5·8·16) | 15～25 | 法兰Flange | 0.01~0.5·0.8·1.6 | 350 | WCB | 210 | 72 | 94 | 103 |
| ES8NF(CS45H–5·8·16) | 15～25 | 法兰Flange | 0.01~0.5·0.8·1.6 | 350 | WCB | 210 | 72 | 94 | 103 |
| ES10(CS15H–8·12·16) | 20～40 | 内螺纹ZG3/4"~1 1/2" Internal Thread | 0.01~0.5·0.8·1.6 | 350 | WCB | 200 | 93 | 132 | 142 |
| ES10F(CS45H–8·12·16) | 15～25 32～50 | 法兰Flange | 0.01~0.5·0.8·1.6 | 350 | WCB | 270 | 93 | 132 | 142 |



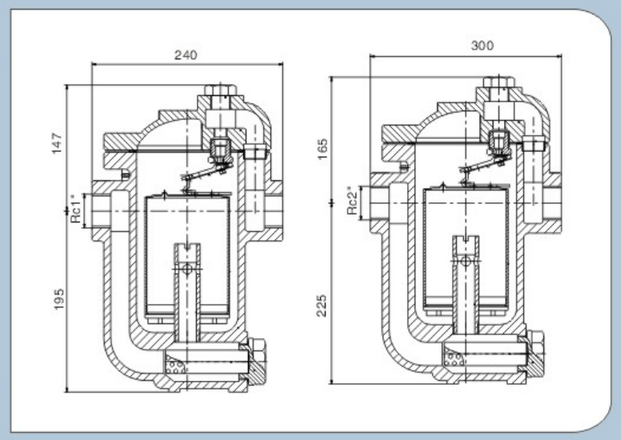


**L883　　L883F**
**L885　　L885F**

## L883型、侧面进出、附过滤网、外部尺寸图（mm）L883 type, side access, with filters, external dimensions(mm)

| 型号 Model | 通 径 Diameter | A | B | C | L | 最大压力(kg/cm²) Maximum pressure(kg/cm²) |
|---|---|---|---|---|---|---|
| L883 | 1/2"–1" | 180 | 147 | 195 | 240 | 55 |
| L883F | 15–25 | 180 | 147 | 195 | 300 | 55 |

## L885型、侧面进出、附过滤网、外部尺寸图（mm）L885 type, side access, with filters, external dimensions(mm)

| 型号 Model | 通 径 Diameter | A | B | C | L | 最大压力(kg/cm²) Maximum pressure(kg/cm²) |
|---|---|---|---|---|---|---|
| L885 | 1 1/4"–2" | 220 | 165 | 225 | 280 | 48 |
| L885F | 32–50 | 220 | 165 | 225 | 350 | 48 |

## 倒桶式蒸汽疏水阀连续排水流量表（KG/HR），选择时必须考虑2–3倍安全系数.

Inverted bucket steam trap continuous drainage flow meter (KG / HR), 2–3 times must be considered when selected safety factor.

| TRAP NUMBER | △P KG/CM² | | | | | | | | | | | |
|---|---|---|---|---|---|---|---|---|---|---|---|---|
| | 0.5 | 1 | 2 | 4 | 9 | 8 | 10 | 12 | 15 | 17 | 21 | 25 |
| L883 L883F | | | | | | | 1240 | 1384 | 1200 | 1240 | 960 | 1040 |

## 倒桶式蒸汽疏水阀连续排水流量表（KG/HR），选择时必须考虑2–3倍安全系数.

Inverted bucket steam trap continuous drainage flow meter (KG / HR), 2–3 times must be considered when selected safety factor.

| TRAP NUMBER | △P KG/CM² | | | | | | | | | | | |
|---|---|---|---|---|---|---|---|---|---|---|---|---|
| | 0.5 | 1 | 2 | 4 | 9 | 8 | 10 | 12 | 15 | 17 | 21 | 25 |
| L885 L885F | | | | | | | 3600 | 3880 | 2400 | 2560 | 2720 | 2320 |

## 订货正确选型条件 Selection of conditions for ordering the correct

用户根据用汽设备的最大耗汽量乘选用倍率（2–3倍），为最大凝结水量来选疏水阀的排水量。疏水阀的最高工作压差，（即阀前工作压力减去阀后背压）有背压要注明，疏水阀的最高工作温度，疏水阀使用工况，连接方式，阀体材料。

The users may choose the discharge capacity of steam trap as per Max.condensation water which is equal to Max.steam consumption of the machine by multiplying factor(2–3times),Max operating differential pressure of steam trap,(namely,working pressure before the valve minus the back pressure behind the valve),shall be specified if there is any back pressure.Maximum working temperature of the steam trap,drainage operating mode,connecting type and body material.



LONZ 隆成阀门
高压倒置桶式疏水阀
High pressure inverted bucket type steam trap

## 一、工作原理 Work Principle

倒置桶式蒸汽疏水阀它是利用冷凝水和蒸汽的密度差的工作原理，内部结构是由杠杆系统连接倒桶，克服蒸汽压力开关，倒桶式疏水阀内部是一个倒桶为液位敏感件，倒桶开口向下。装置刚起动时，管道内出现空气和低温冷凝水，此时疏水阀是全开放，空气和低温冷凝水迅速排出，装置很快提升温度。当蒸汽进入倒桶内，倒桶产生向上浮力，倒桶连接杠杆带动阀心关闭阀门。倒桶上开有一个小孔，能自动排空气，当一部份蒸气从小孔排出，另一部份蒸汽产生凝结水，倒桶失去浮力向下沉，倒桶连接枝杆带动阀心开启阀门。当蒸汽再进入倒桶内，阀门再关闭，循环工作，间断排水。

Inverted bucket steam trap works with the principle of density contrast between condensation water and steam. The internal structure is connected to bucket with lever system, working on steam pressure switches. The bucket is a level sensor in the steam trap with opening downward. When the device starts up, air and low temperature condensation water enter into the pipe. At this time, the steam trap is completely open, which allows quick discharge of air and low temperature condensation water. And the temperature arises soon. When the steam enters into the bucket, it will float up. Since the bucket connects with lever, the lever will drive the valve core to close the valve. The small vent in bucket can drain water automatically. When some of steam is drained out from the vent and others become condensate, then the bucket will sink lack of float. The lever which is connected to bucket will drive the valve core to open the valve. And then the steam will enter into the bucket and the valve will close. It will all circle in this way and drain water successively.

## 二、倒置桶疏水阀的步骤(在接近最高压力情况下) Inverted bucket steam trap Steps (close to the maximum pressure in the case)

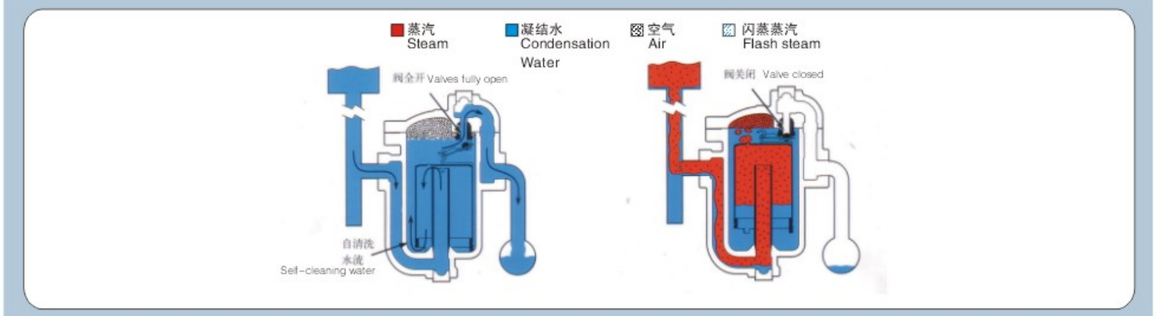


1、蒸汽疏水阀安装在蒸汽加热设备与凝结水回水集管之间。开车时，桶在底部，阀门全开。凝结水进入疏水阀后流到桶底，充满阀体，全部浸没桶体，然后，凝结水通过全开阀门排至回水集管。

1.Steam Trap is installed between steam heating equipment and condensation return water collector. When driving, the bucket is still on the bottom and the valve is fully open. When condensation water enters into steam trap, and then flows into the bottom of bucket to fill the valve body. When it immerses the whole bucket, the condensation water will discharge into return water collector through the fully opened valve.

2. 蒸汽也从桶体底部进入疏水阀，占据桶体内的顶部，产生浮力。桶体慢慢升起，逐渐向阀座方向移动杠杆，直到完全关闭阀门。空气和二氧化碳气体通过桶体的排气小孔，聚集在疏水阀的顶部。从排气孔排出的蒸汽，都会因疏水阀的散热而凝结。

2.Steam goes from the bottom of bucket into the steam trap. It occupies the top of bucket and results in buoyancy. The bucket will arise, and the lever will gradually move toward the seat till the valve is fully closed. Air and carbon dioxide is exhausted through vent hole and gathered at the top of the steam trap. The air exhausted from the vent will condensate due to the heat dissipation of steam trap.

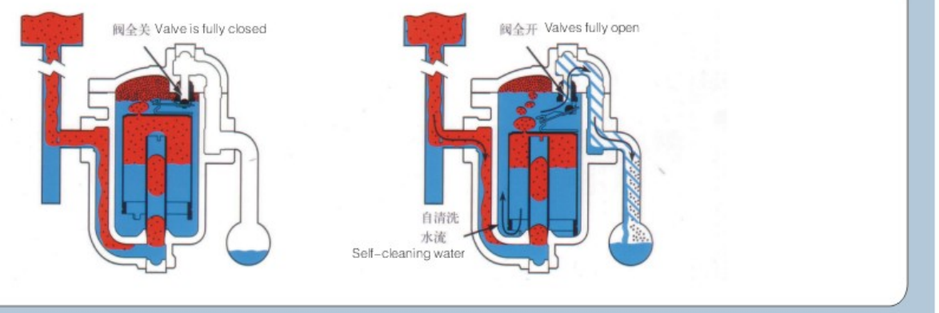


3. 当进来的凝结水开始充满桶体时，桶体开始对杠杆产生一个拉力。随着凝结水位不断升高，产生的力不断增加，直到能够克服压差，打开阀门。

1.When the incoming condensation water fills in the bucket, the bucket will generate a pull force toward the lever. With the rising of condensation water level, the pull force will gradually increase till it can overcome the differential pressure to open the valve.

4. 阀门开始打开，作用在阀辩上的压差就会减小。桶体将迅速下降，使阀门全开。积聚在疏水阀顶部的不凝性气体，先排出，然后凝结水排出。水流从桶体流出时带动污物一起流出疏水阀。凝结水排放的同时，蒸汽重新开始进入疏水阀，新的一个周期又开始了。

4.When the valve starts to open, the force of differential pressure on disc will gradually decrease. The bucket will soon descend, and the valve will fully open. The non–condensable gas gathered on the top of steam trap will be exhausted first and the condensation water will be discharged. The outflow of water from bucket will take dirt away from steam trap. With the discharge of condensation water, the steam will reenter into the steam trap and new circle begins.



L883　　L884F

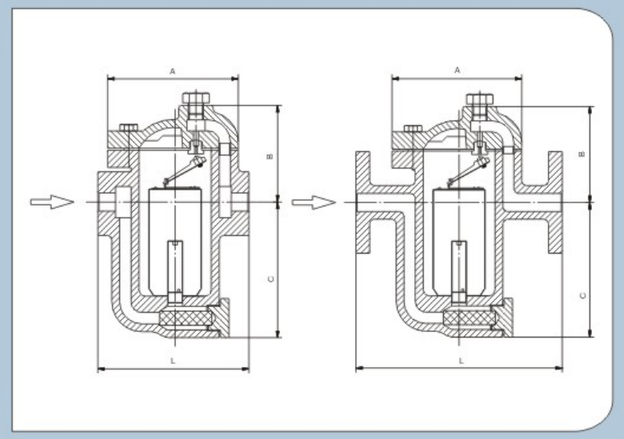


## L880–L885型、侧面进出、附过滤网、外部尺寸图（mm）

Dimensions for Model L880–L885: which is equipped with filters and whose media go in and out from the sides:

| 型号 Type | 通径 Size | A | B | C | L | 最大压力(Maximum pressure) kg/cm² |
|---|---|---|---|---|---|---|
| L880 | 1/2" 3/4" | 96 | 76 | 70 | 128 | 17 |
| L881 | 1/2" 3/4" 1" | 96 | 76 | 100 | 128 | 28 |
| L882 | 3/4" 1" 11/4" | 145 | 94 | 137 | 170 | 27 |
| L883 | 1" 11/4" 11/2" | 180 | 120 | 193 | 202 | 31 |
| L884 | 11/4" 11/2" 1" | 203 | 150 | 212 | 232 | 37 |
| L885 | 11/2" 2" | 220 | 148 | 248 | 250 | 25 |

## L881F–L886F型、法兰口、附过滤网、外部尺寸图（mm）

Dimensions for Model L881F–L886F: which is connected by flange and is equipped with filters.Selection conditions:

| 型号 Type | 通径 Size | A | B | C | L | 最大压力(Maximum pressure) kg/cm² |
|---|---|---|---|---|---|---|
| L881F | 15.20.25 | 96 | 76 | 100 | 170 | 28 |
| L882F | 20.25.32 | 145 | 94 | 137 | 210 | 27 |
| L883F | 25.32.40 | 180 | 121 | 193 | 270 | 31 |
| L884F | 32.40.50 | 203 | 170 | 212 | 320 | 37 |
| L885F | 40.50 | 220 | 148 | 248 | 350 | 25 |
| L886F | 65.80 | 265 | 220 | 310 | 400 | 35 |

## 订货正确选型条件 Selection Conditions

用户根据用汽设备的最大耗汽量乘选用倍率（2–3倍），为最大凝结水量来选疏水阀的排水量。疏水阀的最高工作压差，（即阀前工作压力减去阀后背压）有背压要注明，疏水阀的最高工作温度，疏水使用工况，连接方式，阀材料。

LONZ倒置桶式蒸汽疏水阀，是机械式蒸汽疏水阀，性能优异，适宜低中高压力使用。内部采用不锈钢零件，阀座则用热处理钢，结构坚固，耐磨耐蚀，使用寿命特长，不易损坏。节约蒸汽，提高热机效率及抗背压之特性尤适合冷凝水回收配置。在疏水阀部，可选装择装置逆止阀，节省配管空间。

倒置桶式蒸汽疏水阀它是利用冷凝水和蒸汽的密度差的工作原理，内部结构是由杠杆系统连接倒桶，克服蒸汽压力开关倒桶式疏水阀内部是一个倒桶为液位敏感件，倒桶开口向下。装置刚起动时，管道内出现空气和低温冷凝水，此时疏水阀是全开放，空气和低温冷凝水迅速排出，装置很快提升温度。当蒸汽进入倒桶内，倒桶产生向上浮力，倒桶连接杠杆带动阀心关闭阀门。倒桶上开有一个孔，能自动排空气，当一部分蒸汽从小孔排出，另一部分蒸汽产生凝结水，倒桶失去浮力向下沉，倒桶连接枝杠杆带动阀心开启阀门。当蒸汽再进入倒桶内，阀门再关闭，循环工作，间断排水。

The discharge capacity required for steam trap is determined by the maximum condensation water flow, which is equal to the maximum gas consumption multiplying by rates (2–3times). It is required to specify the maximum differential pressure (that is, upstream pressure subtracts downstream back pressure), maximum working temperature, working conditions, connection, valve materials for steam traps.

LONZ inverted bucket steam trap, as a mechanical steam trap, has outstanding performance and can be applied under low, medium and high pressure. All the internal parts are made of stainless steel, and the seat is applied heat–treated steel. It is firm in structure and resistant to abrasion and corrosion. And it has long life circle and is not perishable. It is highly recommended for condensation water recovery system for its characteristics as steam saving capacity, high heat engine efficiency and resistance to back pressure. The steam trap may be assembled with check valve so as to save piping space.

Inverted bucket steam trap works with the principle of density contrast between condensation water and steam. The internal structure is connected to bucket with lever system, working on steam pressure switches. The bucket is a level sensor in the steam trap with opening downward. When the device starts up, air and low temperature condensation water enter into the tube. At this time, the steam trap is completely open, which allows quick discharge of air and low temperature condensation water. And the temperature arises soon. When the steam enters into the bucket, it will float up. Since the bucket connects with lever, the lever will drive the valve core to close the valve. The small vent in bucket can drain air automatically. When some of steam is drained out form the vent and others become condensate, then the bucket will sink lack of float. The lever which is connected to bucket will drive the valve core to open the valve. And then the steam will enter into the bucket and the valve will close. It will all circle in this way and drain water successively.

## 倒桶式蒸汽疏水阀连续排水能量表（KG/HR）选择时必须考虑2–3倍安全系数

The table shows the water discharge capacity of the inverted bucket type steam trap. (KG/HR) when you select the model, please take 2–3 times of safety factor into consideration.

| TRAP MODEL | | L880 | 881 L881F 81 | 882 L882F 82 | 883 L883F 83 | 884 L884F 84 | 885 L885F 85 | 886F L 86 |
|---|---|---|---|---|---|---|---|---|
| ◁PKG/CM² | 0.5 | 240 | 420 | 800 | 1520 | 2500 | 3960 | 7190 |
| | 1 | 280 | 470 | 930 | 1750 | 2950 | 4500 | 8600 |
| | 2 | 230 | 460 | 930 | 1800 | 3020 | 4500 | 8150 |
| | 4 | 260 | 410 | 920 | 2000 | 3050 | 4400 | 8800 |
| | 8 | 280 | 380 | 800 | 1560 | 2600 | 4600 | 8000 |
| | 9 | 310 | 420 | 900 | 1750 | 2950 | 4900 | 8850 |
| | 10 | 260 | 365 | 660 | 1550 | 2550 | 4500 | 8450 |
| | 12 | 200 | 380 | 720 | 1730 | 2880 | 4850 | 9000 |
| | 15 | 230 | 335 | 560 | 1500 | 2500 | 3000 | 8400 |
| | 17 | 250 | 350 | 600 | 1550 | 2600 | 3200 | 8650 |
| | 21 | | 240 | 864 | 1200 | 2200 | 3400 | 7200 |
| | 25 | | 250 | 900 | 1300 | 2400 | 2900 | 7800 |







HRW150　HRF150

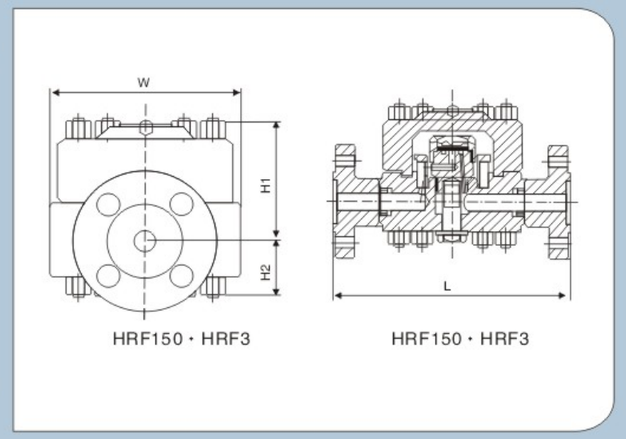


HRF150 · HRF3　　HRF150 · HRF3

## 结构特点 Structure characteristics

1、阀内装有自动保吹除装置。新型皇冠式阀片、密封极为可靠。蒸汽保温装置，高效节能。
2、可迅速排出设备启动时的空气及冷凝结水，排量大，漏汽率小。
3、抗蚀性强，动作可靠，经久耐用。
4、在工作压力范围，无需调整，节能效果显著。

1.This type of steam trap is equipped with automatic blow–off mechanism. The new type crowned valve disc and seal is very reliable. The steam heat protection device saves the energy in an effective way.
2.When the device starts up, it can drain out the air and condensation water quickly with large capacity and low steam leakage rate.
3.It is strong in anti–corrosion, reliable in operation and durable in performance.
4.Within the scale of pressure, it will not require for adjustment and has outstanding performance on energy saving.

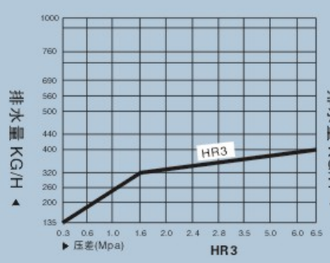


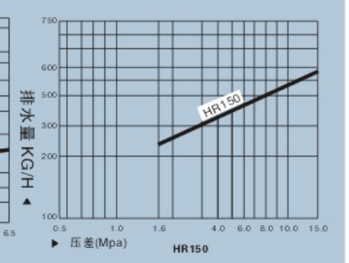


## 主要用途 Main application

用于高温高压的饱和蒸汽主管和透平机的蒸汽亚临界状态使用。
It can be applied for saturated steam main pipeline in high temperature and pressure and in critical state of steam in turbine.

## 外形参数 Specification

| 产品型号 Product model | 口径Size(DN) | 连接方式 Connection Type | 最高允许温度℃ Max.allowable temp.℃ | 阀体材质 Meterial of valve body | 尺寸dimension L | H1 | H2 | W |
|---|---|---|---|---|---|---|---|---|
| HRF3 | 15 | 法兰Flange | 500 | WC6F22 | 230 | 78 | 35 | 135 |
| | 20 | 法兰Flange | 500 | WC6F22 | 230 | 78 | 35 | 135 |
| | 25 | 法兰Flange | 500 | WC6F22 | 230 | 78 | 35 | 135 |
| HRW3 | 15 | 承插焊 Socket welded | 500 | WC6F22 | 128 | 78 | 35 | 135 |
| | 20 | 承插焊 Socket welded | 500 | WC6F22 | 128 | 78 | 35 | 135 |
| | 25 | 承插焊 Socket welded | 500 | WC6F22 | 128 | 78 | 35 | 135 |
| HRF150 CS49H · 160V | 15 | 法兰Flange | 500 | WC6F22 | 400 | 122 | 58 | 228 |
| | 20 | 法兰Flange | 500 | WC6F22 | 400 | 122 | 58 | 228 |
| | 25 | 法兰Flange | 500 | WC6F22 | 400 | 122 | 58 | 228 |
| | 32 | 法兰Flange | 500 | WC6F22 | 400 | 122 | 58 | 228 |
| | 40 | 法兰Flange | 500 | WC6F22 | 400 | 122 | 58 | 228 |
| | 50 | 法兰Flange | 500 | WC6F22 | 400 | 122 | 58 | 228 |
| HRW150 CS69H · 160V | 15 | 承插焊 Socket welded | 500 | WC6F22 | 220 | 122 | 58 | 228 |
| | 20 | 承插焊 Socket welded | 500 | WC6F22 | 220 | 122 | 58 | 228 |
| | 25 | 承插焊 Socket welded | 500 | WC6F22 | 220 | 122 | 58 | 228 |
| | 32 | 承插焊 Socket welded | 500 | WC6F22 | 320 | 122 | 58 | 228 |
| | 40 | 承插焊 Socket welded | 500 | WC6F22 | 320 | 122 | 58 | 228 |
| | 50 | 承插焊 Socket welded | 500 | WC6F22 | 320 | 122 | 58 | 228 |



HR80A HRW/F260A

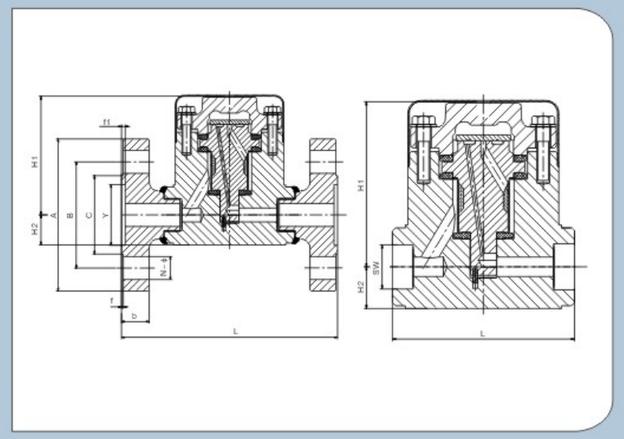


## 特点/性能 Features/performance

变压室蒸气保温不受影响，防止空打现象。
带有双金属环排空气解锁装置能迅速启动。
内装大面积过滤网可实现无故障工作。
使用寿命长，维修方便。
任意方向安装。

When the pressure changes, it will not affect the steam thermal insulation, which to prevent air play phenomenon.
The air vent unlocking device with bimetal ring can start up very quickly.
Large size filter screen is installed inside of the valve to achieve no-failure operation.
It has long life circle and is easy to maintain.

## 主要用途 Main application

用于高温高压、超高压饱和蒸气和过热蒸气管线。

It can be applied for saturated steam main pipeline in high temperature and pres sure and in critical state of steam in turbine.

排量图

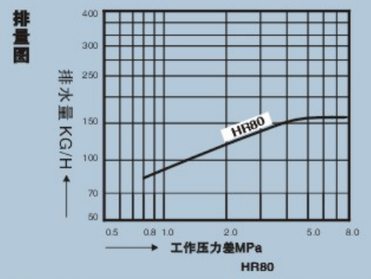


HR80

排量图

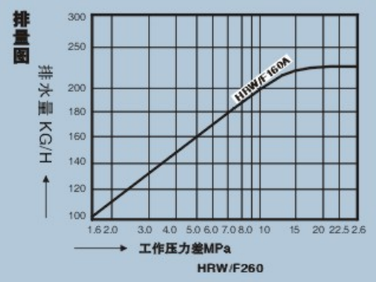


HRW/F260

## 外形参数 Specification

| 产品型号 Product model | 公称通径DN Nominal diameter | 连接方式 Connection Type | 使用压力范围（MPa） Applicable pressure range | 公称压力（MPa） Nominal pressure | 最高允许温度℃ Max.allowable temp.℃ | 阀体材质 Meterial of valve body | 尺寸dimension | | | | 重量 (Kg) |
|---|---|---|---|---|---|---|---|---|---|---|---|
| | | | | | | | L | H | H1 | W | |
| HRW80A | 1/2–1 | 承插焊 Socket welded | 0.8–8.0 | 10.0 | 475 | F22 | 110 | 95 | 20 | 80 | 4.0 |
| HRW260A | 1/2–1 | 承插焊 Socket welded | 1.6–22.0 | 26.0 | 550 | F22 | 140 | 117 | 28 | | 18.0 |
| HRF260A | 1/2–1 | 法兰Flange | 1.6–22.0 | 26.0 | 550 | F22 | 220 | 117 | 28 | | 25.0 |





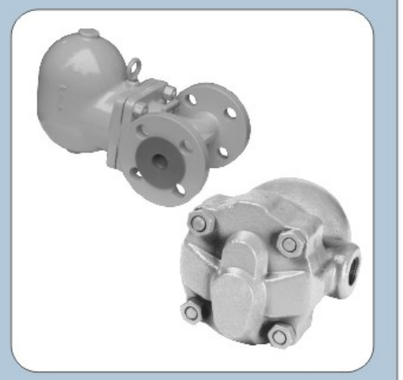

LFT44 LFT14

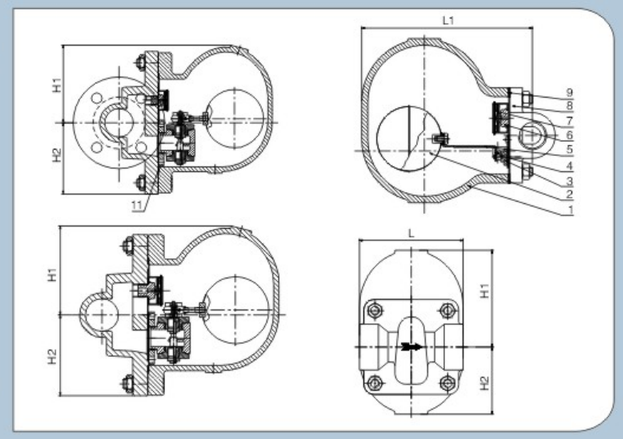


## 结构特点 Structure characteristics

1、该阀采用平衡双阀座，单阀座两种密封，关闭可靠，寿命长久。
2、阀前始终存有高温凝结水，形成可靠的水封，无蒸汽泄漏。
3、动作时无噪声，有利于保护环境。
4、通气初始，阀门全部开启，低温冷凝水和空气迅速排除，大大缩短设备启动时间。
5、内件采用不锈钢，抗腐蚀、气蚀。

1.This type of steam trap is applied with balanced double seat or single seat with reliable closedown and long life circle.
2.There has always been high temperature condensation water upstream, which will form reliable water seal without any leakage of steam
3.Its operation will not cause any noise. Thus, it is preferable to the environment.
4.The valve is completely open when the steam firstly comes. The low temperature condensation water and air can be discharged rapidly, which largely shortens the start time of equipment.
5.All the internal parts are made of stainless steel, which is resistant to corrosicn and cavitaticn erosicn.

排量图

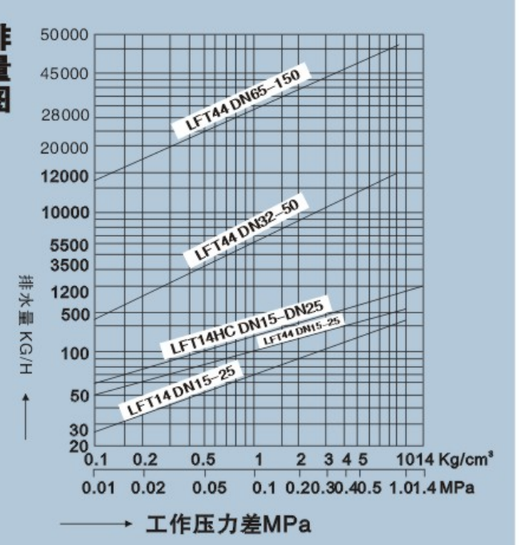


## 外形参数 Specification

| 产品型号 Product model | 口径Size(DN) | 连接方式 Connection Type | 最高允许温度℃ Max.allowable temp.℃ | 阀体材质 Meterial of valve body | 尺寸dimension | | |
|---|---|---|---|---|---|---|---|
| | | | | | L | H1 | H2 |
| LFT14–16C | 15–20 | 内螺纹1–1/4"–2" | 350 | WCB | 125 | 85 | 65 |
| | 25 | 内螺纹1–1/4"–2" | 350 | WCB | 145 | 95 | 70 |
| | 32–50 | 内螺纹1–1/4"–2" | 350 | WCB | 250 | 149 | 100 |
| LFT14HC–16C | 15–25 | 内螺纹1/2"–1" | 350 | WCB | 120 | 115 | 80 |
| 43 LFT 44–16C 47 | 15–20 | 法兰 | 350 | WCB | 150 | 115 | 80 |
| | 25 | 法兰 | 350 | WCB | 160 | 115 | 80 |
| | 32–50 | 法兰 | 350 | WCB | 230 | 150 | 100 |
| | 65–100 | 法兰 | 350 | WCB | 450 | 350 | 170 |
| 直通式LFT44–16C | 32–50 | 法兰 | 350 | WCB | 320 | 149 | 101 |

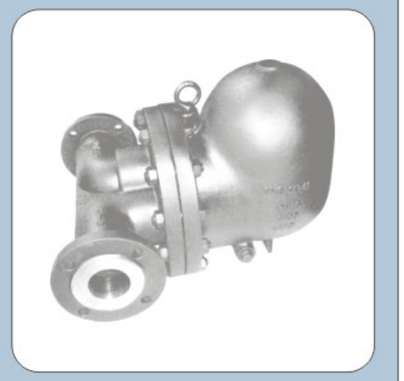

FT44 FT43

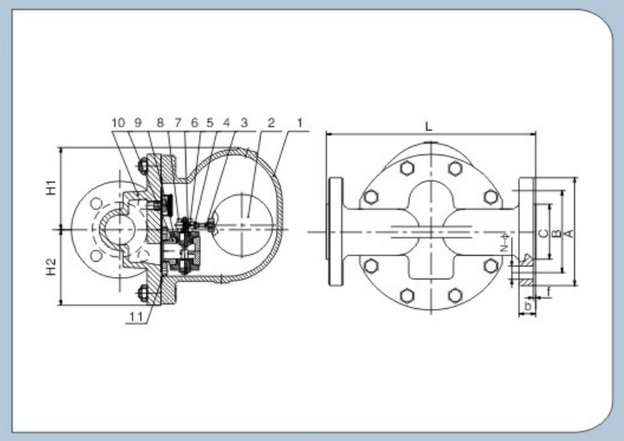


## 技术要求 Technical Requirement

1、设计制造按GB/T22654-2008的规定。

2、结构长度，标志按GB/T12250-2005的规定。

3、试验与检验按GB/T12251-2005的规定.

4、法兰尺寸标准按ASME B16.5的规定.

1. Basic Design: GB/T22654-2008

2. Face to face dimensions: GB/T 12250-2005

3. Test and inspection: GB/T 12251-2005

4. Flange Size according to：ASME B16.5

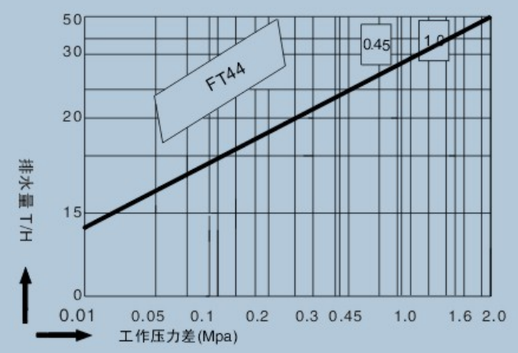


## 外形参数 Specification

| 产品型号 Product model | DN | L | H1 | H2 |
|---|---|---|---|---|
| FT44-150LB PN(16-40) | 65 | 450 | 240 | 175 |
| | 80 | 450 | 240 | 175 |
| | 100 | 450 | 240 | 175 |
| FT44-300LB PN(16-40) | 65 | 480 | 240 | 175 |
| | 80 | 480 | 240 | 175 |
| | 100 | 480 | 240 | 175 |
| FT64-150LB PN(16-40) | 65 | 400 | 240 | 175 |
| | 80 | 400 | 240 | 175 |
| | 100 | 400 | 240 | 175 |





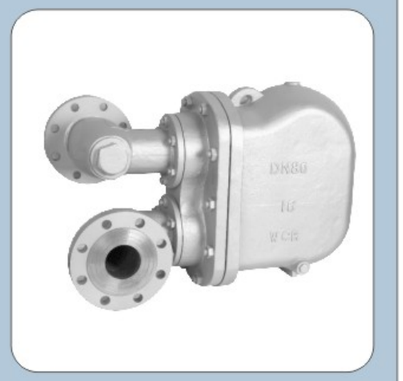

GSB8

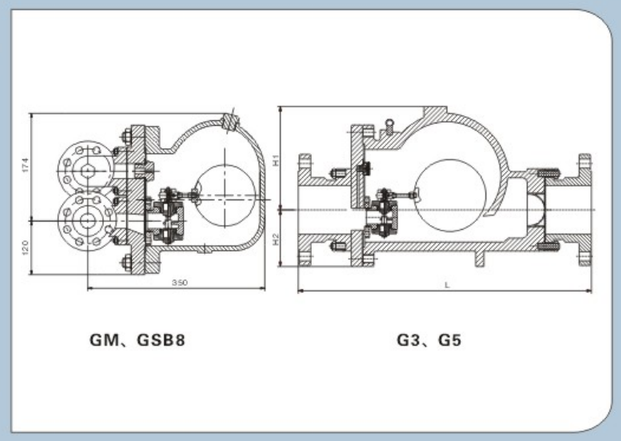


GM、GSB8 G3、G5

## 结构特点 Structure characteristics

1、新型SCCV关闭系统设计，关闭可靠，寿命长久。
2、排放温度可调整，有效地利用高温凝结水中的湿热，节能效果显著。
3、阀前始终存有高温凝结水，形成可靠的水封，无蒸汽泄漏。
4、抗水击。排空气性能优良。
5、动作时无噪声，有利于保护环境。
6、通气初始，阀门全部开启，低温冷凝水和空气迅速排除，大大缩短设备启动时间。
7、内部零件全部用不锈钢制造，抗腐蚀、汽蚀。

1.The new SCCV closing system is reliable in design and serves in a long lifetime.
2.The discharge temperature can be adjusted to save energy by taking the advantage of hot and humid condition in high temperature condensation water.
3.There has always been high temperature condensation water upstream, which will form reliable water seal without any leakage of steam
4.It has excellent abilities to resist water beating and to discharge water.
5.Its operation will not cause any noise. Thus, it is preferable to the environment.
6.The valve is completely open when the steam firstly comes. The low temperature condensation water and air can be discharged rapidly, which largely shortens the start time of equipment.
7.All the internal parts are made of stainless steel, which is resistant to corrosion and cavitation erosion.

## 平衡双阀座结构 Structure for balanced double seat

上、下两个阀芯受到的阀内压力，大小相等，方向相反，使阀芯保持平横。所需的开、关阀力就相对减少。小体积可获得特大的排量。

Both upper and lower valve cores are pressurized equally in opposite directions to keep balance. The force required for opening and closing valve will decrease accordingly. The steam trap with small size can also acquire outsize discharge capacity.

排量图

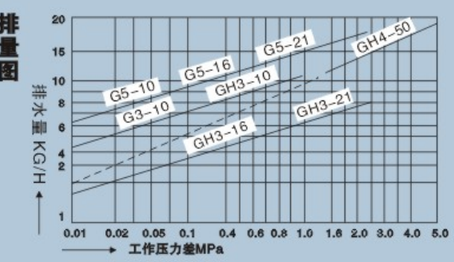


排量图

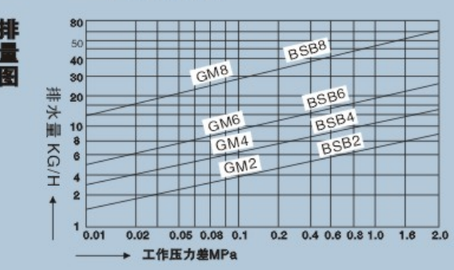


## 外形参数 Specification

| 产品型号 Product model | 口径Size(DN) | 连接方式 Connection Type | 最高允许温度℃ Max.allowable temp.℃ | 阀体材质 Meterial of valve body | 尺寸dimension | | |
|---|---|---|---|---|---|---|---|
| | | | | | L | H1 | H2 |
| GS2 GSB2-16C(CS41H-16C) | 25~50 | 法兰Flange | 350 | WCB | 200 | 82 | 59 |
| GS4 GSB4-16C(CS41H-16C) | 32~50 | 法兰Flange | 350 | WCB | 200 | 105 | 90 |
| GS6 GSB6-16C(CS41H-16C) | 40~80 | 法兰Flange | 350 | WCB | 270 | 130 | 88 |
| GS8 GSB8-16C(CS41H-16C) | 80~100 | 法兰Flange | 350 | WCB | 350 | 174 | 120 |
| GH3-16R(CS41-1.6V) | 25~32 | 法兰Flange | 350 | WCB | 427 | | |
| | 40~50 | 法兰Flange | 350 | WCB | 437 | | |
| GH5-21R(CS41-21V) | 50~100 | 法兰Flange | 350 | WCB | 570 | 182 | 108 |
| GH4-50(CS41H-50V) | 40~ 65 | 法兰Flange | 350 | WCB | 358 | 295 | 140 |

LONZ 隆成阀门

# 高压杆杠浮球式疏水阀
High Leverage Ball Float Trap



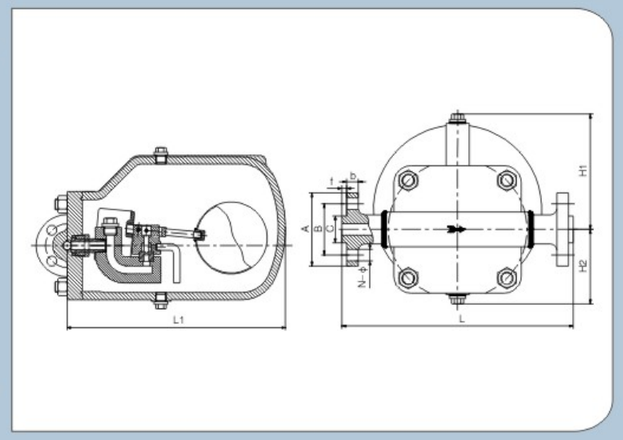


**FT44-600LB**

## 技术要求Technical Requirement

1、设计制造按：ANSI B16.34的规定。

2、结构长度，标志按ISO 6554的规定。

3、试验与检验按GB/T12251-2005的规定.

4、端法兰尺寸按ANSI B16.5.

1. Basic Design: ANSI B16.34

2. Face to face dimensions: ISO 6554

3. Test and inspection: GB/T12251-2005

4. End Flange Size according to：ANSI B16.5

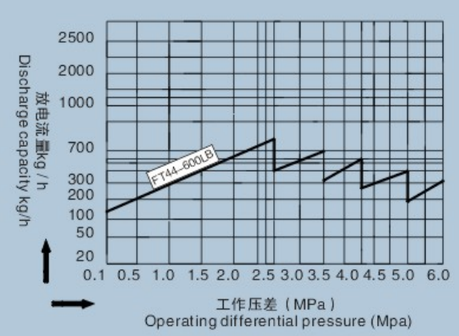


## 外形参数 Specification

| 尺寸 Size | L | L1 | H1 | H2 | A | B | C | f | b | N-φ |
|---|---|---|---|---|---|---|---|---|---|---|
| 1/2" | 300 | 335 | 130 | 100 | 95 | 66.5 | 35 | 6.4 | 15 | 4~φ16 |
| 3/4" | 300 | 335 | 130 | 100 | 118 | 82.5 | 43 | 6.4 | 16 | 4~φ20 |
| 1" | 300 | 335 | 130 | 100 | 124 | 89 | 51 | 6.4 | 18 | 4~φ20 |



LONZ 隆成阀门

# 波纹管式疏水阀
Bellow Type Steam Trap

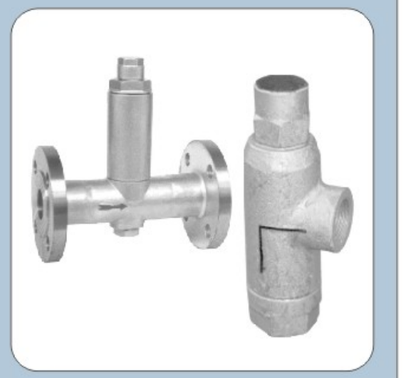

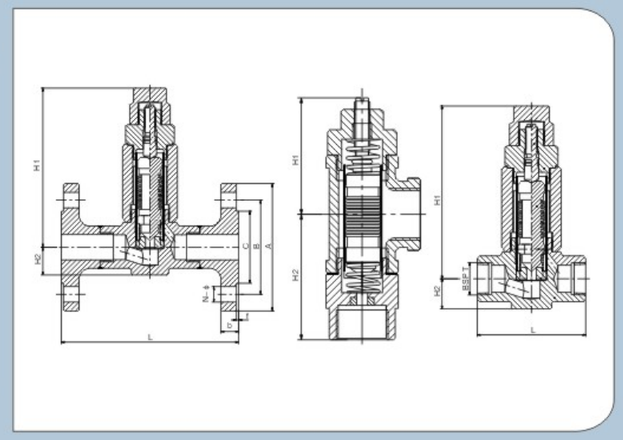


**CS44H　　CS14F**

## 结构特点 Structure characteristics

1、金属波纹管弹性元件在65-110之间可自动调节，还可在排放温度进行手动调整。
2、自动排放空气，无气堵，压力波动时，不影响疏水阀正常工作。
3、该阀内件全部采用不锈钢，耐蚀性强，使用寿命长。
4、有直通式、角式和法兰连接，体积小，安装方便，可任意角度安装。

1.Metal bellow elastic cells can be self-adjusted between 65 and 110. Discharge capacity can also be manually adjusted.
2.It can exhaust air automatically without any block. Fluctuation of pressure will not affect the normal operation of steam trap.
3.All the internal parts are made of stainless steel, with strong anticorrosion and long life service life.
4.It has several types, such as straight type, angle type. Its connection type can be flange, SW. NPT. With small size and convenient installation, it can be installed in any angle.

## 主要用途 Main application

该阀在采暖设备中获得广泛应用，有充分利用热能的优点，特别适用于蒸汽伴热管线。
This steam trap is widely applied in the heating equipment. By taking full advantages of thermal energy, it can be especially applicable for steam thermal pipeline.

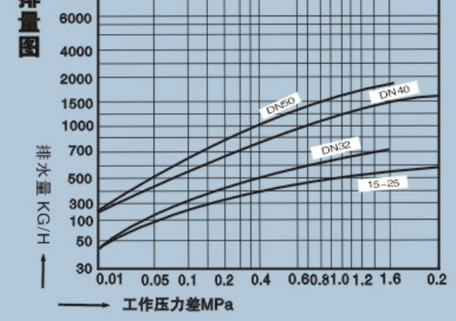


## 外形参数 Specification

| 产品型号 Product model | 口径Size(DN) | 连接方式 Connection Type | 最高允许温度℃ Max.allowable temp.℃ | 阀体材质 Meterial of valve body | 尺寸dimension | | | |
|---|---|---|---|---|---|---|---|---|
| | | | | | L | H1 | H2 | W |
| CS14F-16C 角式 Cope type | 15 | 内螺纹ZG1/2" Intemal Thread | 220 | WCB | | 61.5 | 79 | - |
| | 20 | 内螺纹ZG3/4" Intemal Thread | 220 | WCB | | 61.5 | 79 | - |
| | 25 | 内螺纹ZG1" Intemal Thread | 220 | WCB | | 61.5 | 79 | - |
| CS14F-16C 直通式 Straight isolating | 15~20 | 内螺纹ZG1/2"~3/4" Intemal Thread | 220 | WCB | 90 | 110 | 30 | 42 |
| | 25 | 内螺纹ZG1" Intemal Thread | 220 | WCB | 95 | 110 | 33 | 46 |
| CS44F-16C | 15 | 法兰Flange | 220 | WCB | 150 | 24.5 | 165 | 42 |
| | 20 | 法兰Flange | 220 | WCB | 150 | 24.5 | 165 | 42 |
| | 25 | 法兰Flange | 220 | WCB | 160 | 24.5 | 165 | 46 |
| | 32 | 法兰Flange | 220 | WCB | 210 | 143 | 31 | 61 |
| | 40 | 法兰Flange | 220 | WCB | 230 | 147 | 35 | 61 |
| | 50 | 法兰Flange | 220 | WCB | 230 | 151 | 39 | 61 |

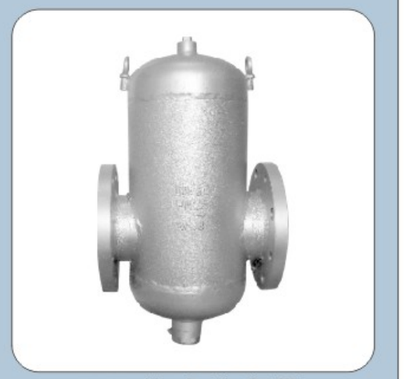

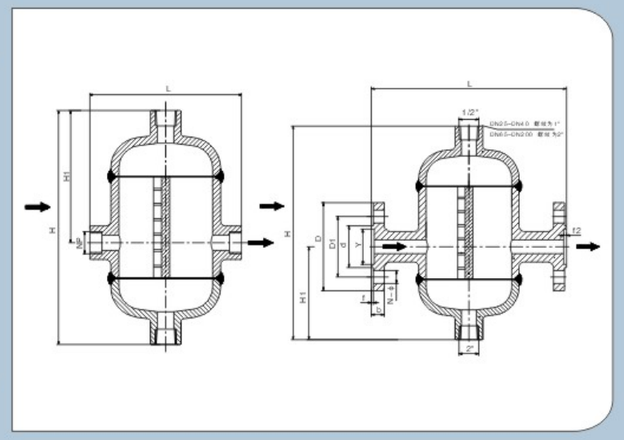

## LS7汽水分离器
## LS7 Steam separator

### 结构特点 Specification

**S7汽水分离器**，碳钢材质，DN65至DN150
S7挡板式汽水分离器用于除去蒸汽，压缩空气和气体中的液体，按Bs5500Category3设计制造，安装一个保温夹套可改善其工作性能。
**口径和管道连接** DN65.80.100.125.150
BS 4504 PN16或PN40法兰连接带BSP螺纹排水口和排空气口。
BS 1560 Class 150或300法兰连接带NPT螺纹排水口和排空气口。
（注：大口径和其他连接方式可特别订购。）

S7 Water Separator, Material: Carbon Steel. Size: DN65 To DN150
The S7 baffle type separator used for the removal of entrained liquids in steam, compressed air and gas systems. It is available in carbon steel material.
We recommend fitting of insulation jacket to improve the performance of the separator.
Sizes and pipe connections DN65/80/100 /125/150

BS 4504 Flanged PN16 or PN40 with screwed BSP drain and air vent
BS 1560 Flanged Class 150 or Class 300 with screwed BSP drain and air vent Installation
The S7 baffle type separator is installed in a horizontal pipeline with the drain straight down.

### 外形参数 Specification

| DN | L | H | H1 | D | D1 | d | Y | b | f | f2 | N–ϕ |
|---|---|---|---|---|---|---|---|---|---|---|---|
| 25 | 210 | 230 | 95 | 115 | 85 | 65 | 58 | 16 | 2 | 4 | 4–ϕ14 |
| 32 | 350 | 580 | 210 | 135 | 100 | 78 | 66 | 18 | 2 | 4 | 4–ϕ18 |
| 40 | 350 | 580 | 210 | 145 | 110 | 85 | 76 | 18 | 3 | 4 | 4–ϕ18 |
| 50 | 350 | 580 | 210 | 160 | 125 | 100 | 88 | 20 | 3 | 4 | 4–ϕ18 |
| 65 | 400 | 620 | 250 | 180 | 145 | 120 | 110 | 22 | 3 | 4 | 8–ϕ18 |
| 80 | 400 | 620 | 250 | 195 | 160 | 135 | 121 | 24 | 3 | 4 | 8–ϕ18 |
| 100 | 400 | 620 | 250 | 230 | 190 | 160 | 150 | 26 | 3 | 4.5 | 8–ϕ23 |
| 125 | 450 | 670 | 270 | 270 | 220 | 188 | 176 | 28 | 3 | 4.5 | 8–ϕ25 |
| 150 | 450 | 670 | 270 | 300 | 250 | 218 | 204 | 30 | 3 | 4.5 | 8–ϕ25 |
| 200 | 500 | 670 | 270 | 375 | 320 | 282 | 260 | 38 | 3 | 4.5 | 12–ϕ30 |

### 安装方法 Installation

安装在水平管道上，排水口垂直向下。所有口径的汽水分离器均带安装支架，可减小管道承载。为确保被分离的液体迅速排放，应在排水口处连接一个合适的排水器。
汽水分离器应用在存在空气的蒸汽系统中时，空气可能会聚集在汽水分离器的上部。此时，应该在去除排空气口的塑料保护塞，并在排空气口上安装一个合适的排空气阀，如果不安装排空气阀，则应除去排空气口的塑料保护塞，并在排空气口上安装碳钢Class 3000 lb塞子。

Separators with all sizes are fitted with support brackets which can be used to minimize piping loads. To ensure that any separated liquid is drained quickly, suitable liquid drainer/ steam trap must be connected to the drain port.
When separators are applied in the steam system with air, air might be gathered in the upper portion of the separator. In this situation the protection plug in the air vent port shall be removed and a suitable air valve should be connected to it. If not, the protection plug in the air vent port shall be removed and the air vent port shall be installed with a Class 300lb carbon steel plug.

| 口 径 Size(DN) | 设计压力(barg) Design pressure | A | B | C | D | E | F | G | H | J | K | 重 量 weight (kg) | 容积（升） Volume (rise) |
|---|---|---|---|---|---|---|---|---|---|---|---|---|---|
| DN65 | 16 | 420 | 252 | 638 | 219 | 159 | 1" | 3/4" | 100 | 263 | 30 | 47 | 18 |
| | 25 | 420 | 252 | 638 | 219 | 159 | 1" | 3/4" | 100 | 263 | 30 | 49 | 18 |
| DN80 | 16 | 523 | 523 | 735 | 273 | 145 | 2" | 3/4" | 125 | 368 | 30 | 80 | 33 |
| | 20 | 523 | 523 | 735 | 273 | 145 | 2" | 3/4" | 125 | 368 | 30 | 88 | 33 |
| DN100 | 16 | 574 | 574 | 735 | 324 | 163 | 2" | 3/4" | 125 | 384 | 40 | 88 | 51 |
| | 20 | 574 | 574 | 795 | 324 | 163 | 2" | 3/4" | 125 | 384 | 40 | 106 | 51 |
| DN125 | 16 | 656 | 656 | 795 | 356 | 230 | 2" | 3/4" | 150 | 416 | 44 | 115 | 67 |
| | 25 | 656 | 656 | 843 | 356 | 230 | 2" | 3/4" | 150 | 416 | 44 | 134 | 67 |
| DN150 | 16 | 706 | 706 | 843 | 406 | 246 | 2" | 3/4" | 150 | 466 | 60 | 154 | 96 |
| | 25 | 706 | 706 | 935 | 406 | 246 | 2" | 3/4" | 150 | 466 | 60 | 172 | 96 |







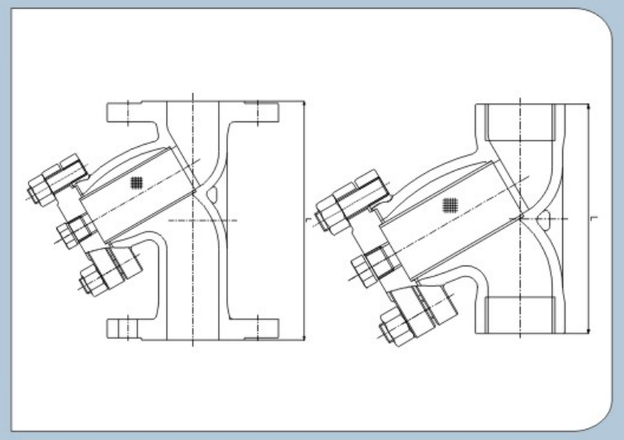

## GL过滤器
## GL Filter

### 外形参数及安装方法 Specification and Installation

尺寸（近似）mm Size (the approximate) mm

| 口径 Size(DN) | A | B | C | D | 过滤网面积$cm^2$ (Screen area) |
|---|---|---|---|---|---|
| 3/8" | 69 | 55 | 87 | 26 | 25 |
| 1/2" | 76 | 55 | 87 | 32 | 25 |
| 3/4" | 88 | 65 | 110 | 38 | 42 |
| 1" | 106 | 78 | 125 | 46 | 71 |
| 1'/4" | 133 | 103 | 155 | 56 | 135 |
| 1'/2" | 146 | 115 | 190 | 62 | 161 |
| 2" | 172 | 140 | 230 | 76 | 251 |

过滤器应按阀体上流向箭头安装在水平或流向向下的垂直管道上。应用于蒸汽或气体的水平管道上时，过滤器阀体应在水平面位置，而在液体系统中阀体应为垂直向下位置。

Filer shall be installed in the horizontal pipelines or vertical pipelines with flow direction down according to the flow arrow on the valve body. When applied in the horizontal pipes with steam or air, filter body shall be located in the horizontal position. However, when applied in the liquid system, the filter body shall be located in the straight down position.

### 外形参数及安装方法 Specification and Installation

尺寸（近似）mm Size (the approximate) mm

| 口径 Size(DN) | PN16 A | AS2129 A | ANSI* A | B | C | 过滤网面积$cm^2$ (Screen area) |
|---|---|---|---|---|---|---|
| DN15 | 130 | 130 | 130 | 70 | 110 | 27 |
| DN20 | 150 | 147 | 150 | 80 | 130 | 43 |
| DN25 | 160 | 157 | 154 | 95 | 150 | 73 |
| DN32 | 180 | 176 | 176 | 135 | 225 | 135 |
| DN40 | 200 | 194 | 194 | 145 | 240 | 164 |
| DN50 | 230 | 224 | 224 | 175 | 300 | 251 |
| DN65 | 290 | 288 | 228 | 200 | 335 | 327 |
| DN80 | 310 | 304 | 304 | 210 | 340 | 361 |
| DN100 | 350 | 350 | 350 | 255 | 415 | 545 |
| DN125 | 400 | 400 | 400 | 300 | 510 | 843 |
| DN150 | 480 | 480 | 480 | 345 | 575 | 1117 |
| DN200 | 600 | 598 | 598 | 435 | 730 | 1909 |

*DN15和DN20 ANSI 150 DN25–DN200 ANSI 125。

过滤器应按阀体上流向箭头所示安装在水平或流向向下的垂直管道上。应用于蒸汽或气体的水平管道上时，过滤器阀体应保持水平面位置，而在液体系统中阀体应为垂直向下位置。
注：由于受到铸铁材质韧性的限定，建议螺栓拧紧扭矩最大不超过240N/$mm^2$

Filer shall be installed in the horizontal pipelines or vertical pipelines with flow direction down according to the flow arrow on the valve body. When applied in the horizontal pipes with steam or air, filter body shall be located in the horizontal position. However, when applied in the liquid system, the filter body shall be located in the straight down position.
(Note: due to the limitation of toughness for cast iron material, it is recommended that the bolt tightening torque shall no larger than 240N/$mm^2$.)

LONZ
隆成阀门

ZHEJIANG
LONZE VALVE
CO.,LTD
浙江隆成阀门有限公司

## 重视开发 / 提升品牌 EMPHASIS ON THE DEVELOPMENT PROMOTION OF THE BRAND

质量是企业的生命线，要求全体员工必须牢固树立这个观点，产品质量的提升，是企业品牌的提升，是企业永远立于不败之地的法宝，所以我们一定要以质量零缺陷的标准来衡量我们的产品，每种产品投放市场，必须做到自己最满意、最放心，自己认为是最好的。只有质量永远保持最好，才能做到品牌不倒。

Quality is the lifeline of the enterprise, a point of view which all employees shall firmly stick to. Improvement of our products helps to promote the brand, which makes the enterprise stand in an invincible position. Therefore, we must measure our products with the zero defects standard. Each product which is thrown into the market must be our most satisfied, most assured and best product. Only with perfect quality can our company and brand move forward smoothly.






加强人力资源开发、市场开发和科技开发,全面实施人才战略、品牌战略、创新战略、国际化经营战略和企业文化战略，培育公司核心竞争力,推动公司高效快速发展……

To strengthen human resources development, market development and technology development

To fully tmplement talent strategy, brand strategy, innovation strategy, international operation strategy and enterprise culture strategy.

To Cultivate the core competitive power,and to promote the company's quick and efficient development.....

# QUALITY POLICY
## 质量方针

### ☐ 精心细作/ELABORATE WORK：

为实现以顾客满意为目标，公司的产品必须精心细作，
满足顾客要求；
Our company must elaborately work to meet the customers' requirements in order to achieve the goal of satisfactory services.

### ☐ 科学管理/SCIENTIFIC MANAGEMENT：

本公司要以科学的方法来管理企业，
以最好的质量和最高的效率保持企业的生命力；
The company manages the enterprise in scientific method and keeps the enterprise vitality with the best quality and the highest efficiency.

### ☐ 诚信经营/GOOD FAITH MANAGEMENT：

以诚信为本，赢得顾客的信任，
开拓市场，增加销售渠道；
Our company manages in good faith, to win the trust of the customer, and develops the market, to increasd sales channel;

### ☐ 不断满足顾客的需求和期望 CONSTANTLY MEET CUSTOMER NEEDS AND EXPECTATIONS：

顾客的需求和期望是不断变化的，
企业必须持续改进产品和过程，
才能满足顾客的需要和期望。
Customer needs and expectations are always changing. The enterprise must continue to improve the product and process, to meet customer needs and expectations.



# SALES NETWORK

## 销售网络/

在积累人才，技术、品牌和规模优势的基础上，隆成又重点加强了市场网络建设，并逐步地由一、二级市场的基础上重点开拓三级市场。目前，隆成已在全国二十多个省、市建立了完善的销售网络，并远销中东、东南亚、欧美等二十多个国家……

On the base of accumulation of talents, technology, brand and scale, Lonz also strengthens the market network construction and expands from primary, secondary market to three-level market step by step. At present, Lonz has established a perfect sale network covering more than 20 cities and provinces, and also expanded the market to Middle East, Southeast Asia, Europe and America and so on.

As an advisory and assistant for customers, Lonz will make customers acquire rich gain for each of their investment.

# SERVICE SYSTEM

## 服务体系

### 1、售前服务/Pre-sale service:

当好客户的参谋和助手，让用户的每一份投资都获得丰厚的回报。
（1）设备型号的选择。
（2）根据客户的特殊要求，设计制造产品。
（3）为客户培训技术人员。
（4）提供新、特、难工程施工技术咨询或拟定合适的施工方案。

When the customer advisory and assistant, let users' each investment have rich rewards.
(1) Selection of equipment.
(2) Designing and manufacturing products according to customer's specified requirement..
(3) Training technical personnel for customers.
(4) Providing technical consulting or Drawing up suitable construction plan for new, special and difficult engineering construction.

### 2、售中服务/Sale service:

尊重客户；给客户一个放心，一份轻松，一份惊喜；致力于提高客户的整体价值。
To respect customers. To improve overall values for clients.

（1）保修期内送货上门。 (1) Door-to-door service during the period of warranty
（2）产品的预验收。 (2) Pre-assessment and acceptance of products
（3）向顾客介绍隆成的服务体系。 (3) The customer service system to introduce Lonz

### 3、售后服务/After-sales service:

提高客户整体价值，让客户无后顾之忧。
（1）协助用户拟定首次施工方案。
（2）设备安装调试。
（3）现场培训操作人员。
（4）定期巡检设备。
（5）快速主动，现场排故。
（6）保修配件送货上门。
（7）重点工程的跟踪服务。
（8）积极寻找潜在不满意用户，抱怨资源化。
（9）提供超值服务。
（10）提供技术交流的机会。
（11）开展大项维修业务。

Improve the whole customer value, without fear of an attack from the rear
(1) To assist users in their first construction shceme.
(2) Equipment installation and debugging
(3) To train personnel on site
(4) Regular inspection on equipments
(5) Fast, active and on-site troubleshooting
(6) Door-to-door service during the pericd of warranty
(7) Key project tracking service
(8) To actively lcok for potential unsatisfied users, and to resource the complaints
(9) To provide prominent services.
(10) To provide the opportunity to exchange technolcgy
(11) To develop major maintenance business.

欢迎登陆本公司网站了解更多（Welcome to visit our web site to see more）……
Http://www.lonzvalve.com